Micro System

MCW770/21/22/37

Service
Service
Service

Service Manual

connectedplanet

TABLE OF CONTENTS

	chapter
Technical Specification and Measurement setup	1-2
Location of printed circuit boards	1-5
Warnings & Safety	2-1
Brief Operating Instructions	3-1 to 3-6
Dismantling Instructions	4-1 to 4-8
Service hints	5-1 to 5-4
Service Test Program	5-3 to 5-4
BLOCK DIAGRAM	6-1
WIRING DIAGRAM	6-2
FRONT BOARD	7-1 to 7-3
HEADPHONE BOARD	7-4
LIGHTGUIDE BOARDS	7-4
WESSLI (wireless link) MODULE (for orientation only)	8-1 to 8-8

	chapter
TUNER BOARD	
ECO6 Systems *Cenelec* (for /22 only)	9-1 to 9-2
ECO6 Systems *non Cenelec* (for /21/37 only)	9-3 to 9-4
CD CHANGER *5DTC*	10-1 to 10-14
POWER 2003 MODULE	11-1 to 11-16
COMBI BOARD	11-4 to 11-11
MAINS BOARD	11-12 to 11-13
EXPLODED VIEWS	
apparatus	12-1 to 12-2
CD changer	10-14
MECHANICAL PARTSLIST	13-1
ELECTRICAL PARTSLIST	
Front Board and Tuner Boards	13-2 ff
for partslist of CD Changer see	10-13
for partslist of Power Module see	11-14

**CLASS 1
LASER PRODUCT**

© Copyright 2004 Philips Consumer Electronics B.V. Eindhoven, The Netherlands
All rights reserved. No part of this publication may be reproduced, stored in a retrieval system or transmitted, in any form or by any means, electronic, mechanical, photocopying, or otherwise without the prior permission of Philips.

Published by MS 0430 Service HENT Printed in The Netherlands Subject to modification

GB 3103 785 25280

Version 1.0

PHILIPS

TECHNICAL SPECIFICATION

General:

Mains voltage : 230V±10%, 50Hz for /22
127V/240V +10% -15%, 50-60Hz switchable for for /21
120V±10%, 60Hz for /37

Power consumption : ≤ 45W (measured at 1/8 P_{rated})
≤ 10W in Standby
≤ 0,5W in ECO Standby

Input / Output:

Auxiliary / CDR in:

input sensitivity : ≤500mV_{rms}, Aux
≤1000mV_{rms}, CDR

input impedance : 29kΩ

Headphone:

output level : max. 2,5V_{rms} at100Ω
frequency response: 40Hz - 16.000 Hz ±3dB (typ. ±1dB), measured in JAZZ mode
distortion : ≤ 1% (typ. 0,15%) at 1 kHz and -20dB output level at 120Ω
channel difference : ≤ 1dB at 1 kHz
channel crosstalk : ≤ -35dB at 1kHz (typ. -60dB)
signal/noise ratio : ≥ 60dB (A-weighted)

Amplifier:

Power stage protection : shortcircuit and DC

Output power : 2 x 70W_{rms} +0,6dB at 6Ω D=10%
frequency response: 40Hz - 16000Hz ±3dB (typ. ±1dB), measured in JAZZ mode
distortion : ≤ 1% (typ. 0,15%) at 1 kHz and 1W output power
channel difference : ≤ 1dB at 1 kHz and 1W output power
channel crosstalk : ≤ -35dB at 1kHz (typ. -60dB)
signal/noise ratio : ≥ 60dB (A-weighted)

DC on output : ≤ 50mV with no signal on input

Digital Sound Control *DSC*

tolerance: ±3dB	**60Hz**	**1kHz**	**12kHz**
Jazz (flat) :	-1dB	0dB	0dB
Rock :	+18dB	+2,5dB	+8dB
Pop :	+17dB	+2dB	0dB
Optimal :	+9dB	+1dB	+3,5dB

Virtual Environment Control *VEC*

tolerance: ±3dB	**60Hz**	**1kHz**	**12kHz**
Jazz (flat) :	-1dB	0dB	0dB
Cyber :	+6,5dB	+2dB	+5dB
Concert :	+4,5dB	+2dB	+3dB
Cinema :	+7dB	+2dB	+2dB
Hall :	+13dB	+2dB	+1dB

Tuner:

	FM	**MW (AM)**
tuning range	87,5 - 108 MHz	531 - 1602 kHz (530 - 1700 kHz for /21/37)
IF	10,7 MHz ± 20 kHz	450kHz ± 1 kHz
sensitivity Mono: 26dB S/N, m=30%	≤ 5 µV (2µV typ.)	≤ 4mV/m (2mV/m typ.)
-3 dB limiting point	≤ 5 µV (2µV typ.)	
frequency grid	50 kHz (100 kHz for /37) (50/100 kHz* for /21) * can be selected via software initialization	9 kHz (10 kHz for /37) (9/10 kHz* for /21)
distortion	≤ 3% (≤ 1% typ.) RF=1mV Δf=75kHz	≤ 5% (3% typ.) RF=50mV/m m=80%
image rejection ratio	≥ 25dB (40dB typ.)	≥ 28dB
channel separation at 1kHz	≥ 22dB (27dB typ.)	----

TECHNICAL SPECIFICATION

CD module: To be measured on COMBI BOARD connector 1015 .

frequency response : 20Hz - 20.000 Hz ±3dB
signal/noise ratio : ≥ 76dB (A-weighted)
distortion : ≤ 0,5% at 1 kHz)
channel difference : ≤ 1dB at 1 kHz
channel crosstalk : ≤ -60dB at 1kHz
de emphasis : 0 or 15/50µs switched automatically by subcode on the disc

laser
output power : 500µW
wave length : 780 ±20nm

Wireless module „WESSLI“: To be measured on COMBI BOARD connector 1022 .

frequency response : 20 - 20.000 Hz ±3dB
signal/noise ratio : ≥ 94dB (A-weighted)
distortion : ≤ 0,05% at 1 kHz)
channel difference : ≤ 1dB at 1 kHz
channel crosstalk : ≤ -75dB at 1kHz

Measurement setup

Tuner FM

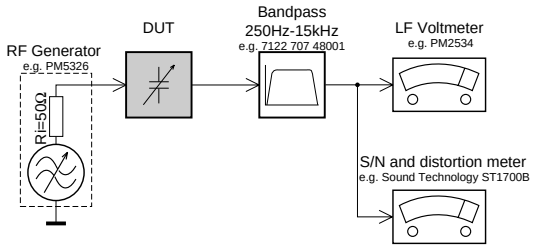

Use a bandpass filter to eliminate hum (50Hz, 100Hz) and disturbance from the pilottone (19kHz, 38kHz).

Tuner AM (MW,LW)

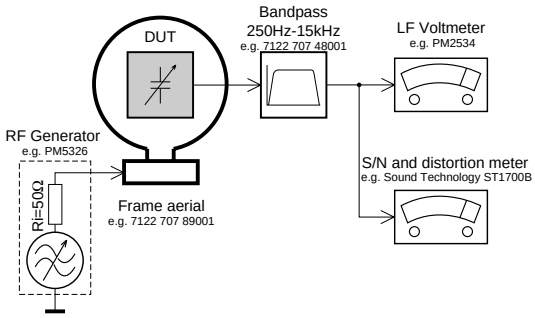

To avoid atmospheric interference all AM-measurements have to be carried out in a Faraday´s cage.
Use a bandpass filter (or at least a high pass filter with 250Hz) to eliminate hum (50Hz, 100Hz).

CD

Use Audio Signal Disc SBC429 4822 397 30184
(replaces test disc 3)

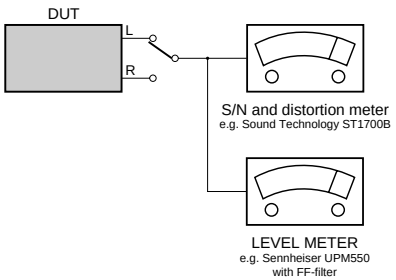

TECHNICAL SPECIFICATION

Remote Control:

RC5/RC6 commands ***RC19532014/0***

RC KEY	SYSTEM CODE				COMMAND CODE
	Tuner	CD	Aux.	PC LINK	
⏻ (standby)	17	20	21	057	12
CD	20	20	20	20	63
TUNER	17	17	17	17	63
AUX	21	21	21	21	63
PC LINK	057	057	057	057	063
CD1	20	20	20	20	55
CD2	20	20	20	20	56
CD3	20	20	20	20	57
CD4	20	20	20	20	100
CD5	20	20	20	20	101
VOLUME -	16	16	16	16	17
VOLUME +	16	16	16	16	16
ALBUM +	17	20	21	057	32 (Tuner) 112 (CD) 30 (Aux) 139 (PC Link)
ALBUM -	17	20	21	057	33 (Tuner) 113 (CD) 31 (Aux) 140 (PC Link)
■ (stop)	17	20	21	057	54 (Tuner, CD, Aux) 049 (PC Link)
▶II (play/pause)	17	20	21	057	53 (Tuner, CD, Aux) 044 (PC Link)
⏮ (track / tune)	17	20	21	057	31 (Tuner) 33 (CD, Aux) 033 (PC Link)
⏭ (track / tune)	17	20	21	057	30 (Tuner) 32 (CD, Aux) 032 (PC Link)
REPEAT	NO CODE	20	NO CODE	057	29 (CD) 029 (PC Link)
PROGRAM	17	20	21	NO CODE	122 (Tuner) 36 (CD, Aux)
SHUFFLE	NO CODE	20	NO CODE	057	28 (CD) 028 (PC Link)
DISPLAY	17	20	NO CODE	057	11 (Tuner, CD) 072 (PC Link)
SLEEP	16	16	16	16	38
CLOCK	16	16	16	16	15
TIMER	16	16	16	16	48
TIMER ON/OFF	16	16	16	16	89
RDS/NEWS	17	17	17	17	15
DIM	16	16	16	16	71
DSC	16	16	16	16	79
VEC	16	16	16	16	107
HOME	057	057	057	057	141
MUTE	16	16	16	16	13

The RC19532014 uses standard RC5 codes for Tuner- CD- and Aux-mode and standard RC6 code for PC Link-mode.

LOCATION OF PRINTED BOARDS

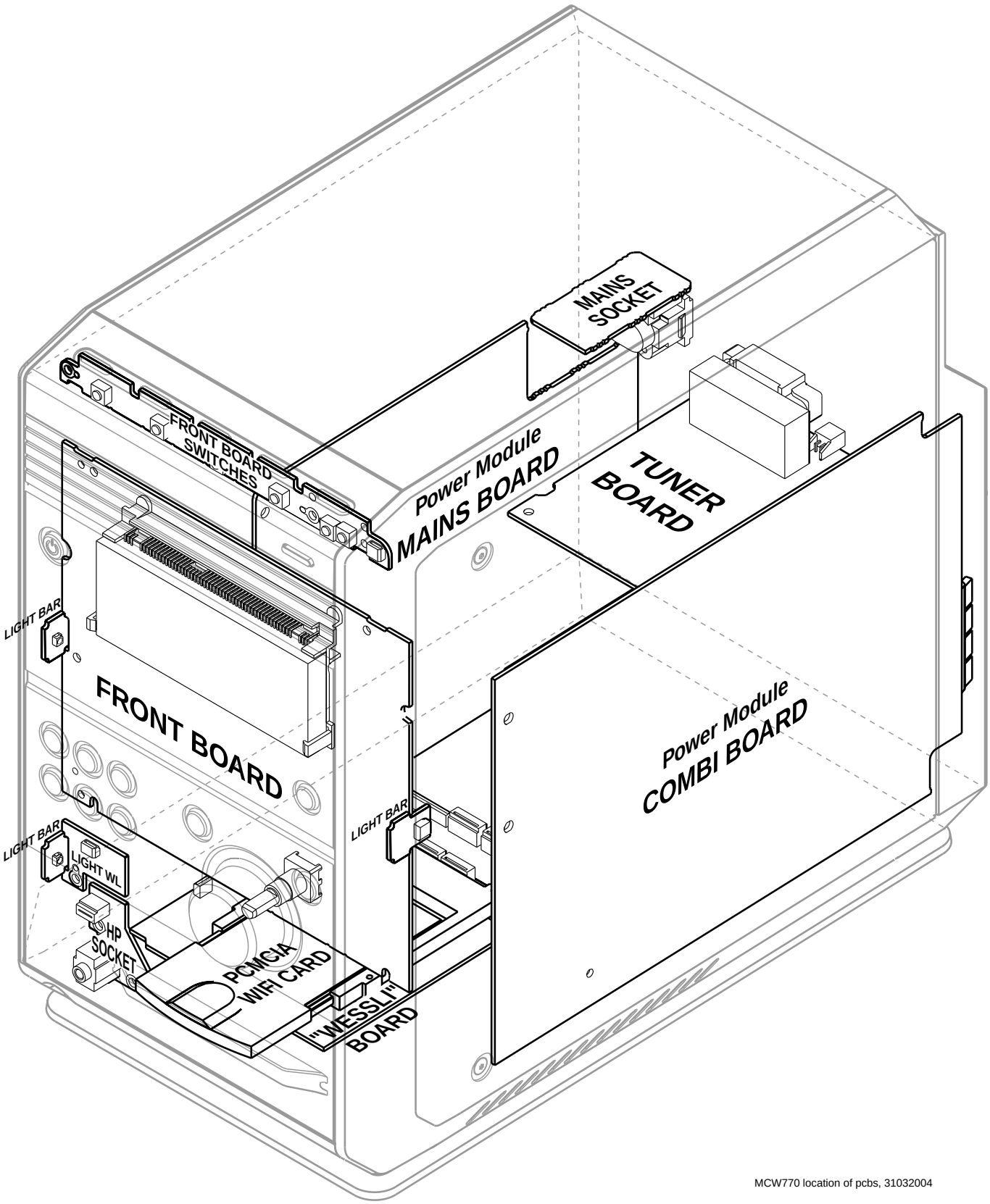

MCW770 location of pcbs, 31032004

WARNINGS & SAFETY

ESD

(GB) WARNING
All ICs and many other semiconductors are susceptible to electrostatic discharges (ESD). Careless handling during repair can reduce life drastically.
When repairing, make sure that you are connected with the same potential as the mass of the set via a wristband with resistance. Keep components and tools at this potential.

(F) ATTENTION
Tous les IC et beaucoup d´autres semi-conducteurs sont sensibles aux décharges statiques (ESD). Leur longévite pourrait être considérablement écourtée par le fait qu´aucune précaution nést prise à leur manipulation.
Lors de réparations, s´assurer de bien être relié au même potentiel que la masse de l´appareil et enfileer le bracelet serti d´une résistance de sécurité.
Veiller à ce que les composants ainsi que les outils que l´on utilise soient également à ce potentiel.

(D) WARNUNG
Alle ICs und viele andere Halbleiter sind empfindlich gegenüber elektrostatischen Entladungen (ESD).
Unsorgfältige Behandlung im Reparaturfall kann die Lebensdauer drastisch reduzieren.
Sorgen Sie dafür, daß Sie im Reparaturfall über ein Puls-armband mit Widerstand mit dem Massepotential des Gerätes verbunden sind.
Halten Sie Bauteile und Hilfsmittel ebenfalls auf diesem Potential.

(NL) WAARSCHUWING
Alle IC´s en vele andere halfgeleiders zijn gevoelig voor electrostatische ontladingen (ESD).
Onzorgvuldig behandelen tijdens reparatie kan de levensduur drastisch doen vermindern. Zorg ervoor dat u tijdens reparatie via een polsband met weerstand verbonden bent met hetzelfde potentiaal als de massa van het apparaat.
Houd componenten en hulpmiddelen ook op ditzelfde potentiaal.

(I) AVVERTIMENTO
Tutti IC e parecchi semi-conduttori sono sensibili alle scariche statiche (ESD).
La loro longevità potrebbe essere fortemente ridatta in caso di non osservazione della più grande cauzione alla loro manipolazione. Durante le riparationi occorre quindi essere collegato allo stesso potenziale che quello della massa delápparecchio tramite un braccialetto a resistenza.
Assicurarsi che i componenti e anche gli utensili con quali si lavora siano anche a questo potenziale.

(GB) AVAILABLE ESD PROTECTION EQUIPMENT :

KIT ESD3 (small tablemat, wristband, connection box, extension cable and earth cable)	4822 310 10671
wristband tester	4822 344 13999

SAFETY

(GB)
Safety regulations require that the set has to be restored to its original condition and parts which are identical with those specified be used. Replace safety components only by components identical to the original ones.
Safety components are marked by the symbol ⚠

(F)
Les normes de sécurité exigent que l`appareil soit remis à l`état d`origine et que soient utilisées les pièces de rechange identiques à celles spécifiées.
Les composants de sécurité sont marqués ⚠

(D)
Bei jeder Reparatur sind die geltenden Sicherheitsvor-schriften zu beachten. Der Originalzustand des Gerätes darf nicht verändert werden. Für Reparaturen sind Bauteile gleicher Spezifikation zu verwenden. Für Sicherheitsbauteile sind Originalersatzteile zu verwenden.
Sicherheitsbauteile sind durch das Symbol ⚠ markiert.

(NL)
Veiligheidsbepalingen vereisen, dat het apparaat in zijn oorspronkeliijke toestand wordt teruggebracht en dat onderdelen, identiek aan de gespecificeerde, worden toegepast.
De Veiligheidsonderdelen zijn aangeduid met het symbool ⚠

(I)
Le norme di sicurezza estigono che l´apparecchio venga rimesso nelle condizioni originali e che siano utilizzati i pezzi di ricambiago identici a quelli specificati.
Componenty di sicurezza sono marcati con ⚠

(GB) **DANGER**: Invisible laser radiation when open. AVOID DIRECT EXPOSURE TO BEAM.

CLASS 1
LASER PRODUCT

(S) Varning !
Osynlig laserstrålning när apparaten är öppnad och spärren är urkopplad. Betrakta ej strålen.

(DK) Advarsel !
Usynlig laserstråling ved åbning når sikkerhedsafbrydere er ude af funktion. Undgå udsaettelse for stråling.

(FIN) Varoitus !
Avatussa laitteessa ja suojalukituksen ohitettaessa olet alttiina näkymättömälle laserisäteilylle. Älä katso säteeseen !

(GB)
After servicing and before returning the set to customer perform a leakage current measurement test from all exposed metal parts to earth ground, to assure no shock hazard exists.
The leakage current must not exceed 0.5mA.

(F)
"Pour votre sécurite, ces documents doivent être utilisés par des spécialistes agréés, seuls habilités à réparer votre appareil en panne".

BRIEF OPERATING INSTRUCTIONS

The following excerpt of the Owner´s Manual serves as a very short introduction to the set.
The complete Owners Manual can be downloaded in several languages from the Internet site of Philips Customer Care Center: **www.p4c.philips.com**

English

Controls and connections

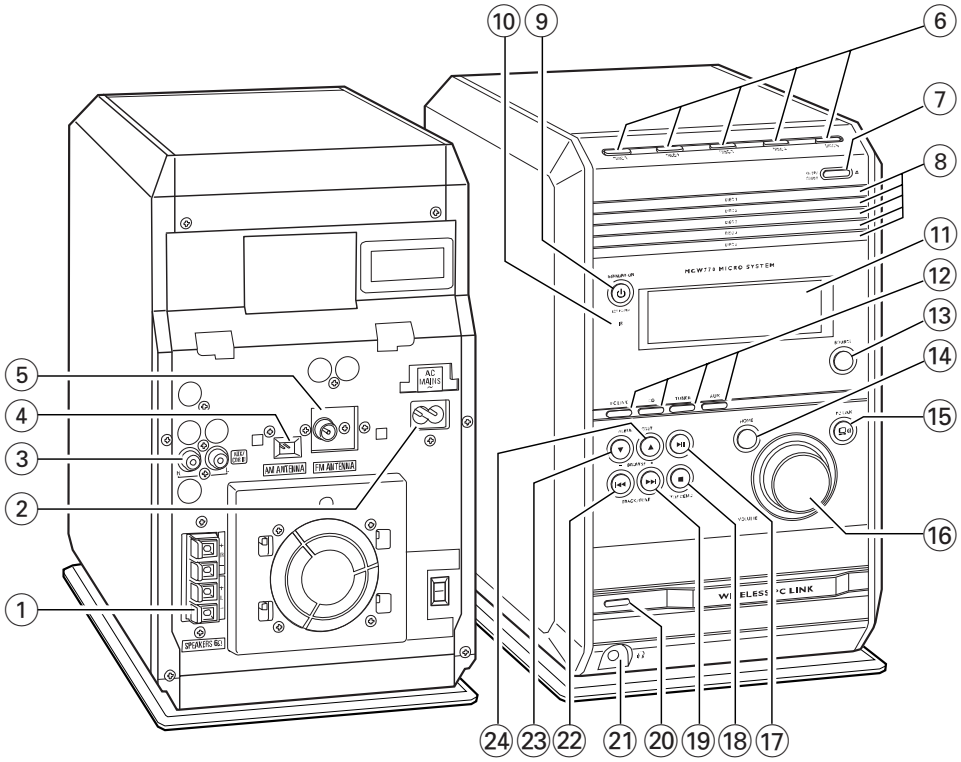

On the back

① **SPEAKERS 6Ω L/R**
connect to the supplied speakers

② **AC MAINS ~**
After all other connections have been made, connect the mains lead to the wall socket.

③ **AUX/CDR IN R/L**
connect to the analogue audio output of an additional appliance

④ **AMANTENNA**
connect the supplied loop antenna here

⑤ **FMANTENNA**
connect the supplied wire antenna here

On the front

⑥ **DISC 1**, **DISC 2**, **DISC 3**, **DISC 4**, **DISC 5**
selects a disc tray and starts playback

⑦ **OPEN/CLOSE ▲**
opens/closes the disc tray

⑧ disc trays

English

Controls and connections

⑨ **STANDBY-ON** ⏻
switches the set to (Eco Power) standby

⑩ **iR**
sensor for the infrared remote control
Note:Always point the remote control towards this sensor.

⑪ display

⑫ **source control lights**
when a source is activ e the respectiv e control light lights up

⑬ **SOURCE**
toggles between the sources:
CD: the CD changer is selected
TUNER FM: the FM tuner waveband is selected
TUNER MW: the MW tuner waveband is selected
AUX: the high level input sensitivity for an additional connected appliance is selected
AUX CDR: the low level input sensitivity for an additional connected appliance is selected

⑭ **HOME**
PC LINK: returns to the first lev el of the file structure

⑮ **PC LINK**
selects the connected PC as source

⑯ **VOLUME rotary**
adjusts the volume

⑰ ▶II
starts and interrupts plaback

⑱ **STOP DEMO** ■
– stops playback
– deactivates/activates the demonstration mode (press and hold the button for 5 seconds)

⑲ ▶▶|
CD:
– selects the next track
– searches f orwards (press and hold the button) within the current track
TUNER: tunes to a higher radio frequency (press and hold the b utton for more than a half second)
CLOCK or TIMER: sets the minutes
PC LINK: selects the next item

⑳ **WIRELESS PC LINK control light**
lights up and blinks when PC LINK data are transferred

㉑ 🎧
3.5 mm headphone socket
Note: Connecting the headphones will switch off the speakers.

㉒ |◀◀
CD:
– selects the previous track
– searches backwards (press and hold the button) within the current track
TUNER: tunes to a lower radio frequency (press and hold the b utton for more than a half second)
CLOCK or TIMER: sets the minutes
PC LINK: selects the previous item

㉓ **ALBUM/PRESET ▼ BROWSE −**
CD: selects the previous album on an MP3-CD
TUNER: selects the previous preset radio station
PC LINK: selects the previous level
CLOCK or TIMER: sets the hours

ALBUM/PRESET ▲ BROWSE +
CD: selects the next album on an MP3-CD
TUNER: selects the next preset radio station
PC LINK: selects the next level
CLOCK or TIMER: sets the hours

Quick Use Guide

MCW770

English

This Quick Use Guide giv es a rough overview and helps to start quickly with basic steps. Please read the supplied instruction manual for detailed information.

Supplied accessories

– PC link software installer CD-ROM
– Wireless USB adapter and extension cable
– Remote control and 2 batteries, size AA
– 2 loudspeaker boxes including 2 speaker cables
– AM/MW loop antenna
– FM wire antenna
– AC power cord

1 Insert batteries

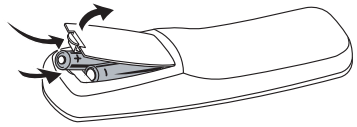

Open the battery compartment of the remote control and insert 2 alkaline batteries, type **AA** (R06, UM-3).

2 Connect speakers, antennas, an additional appliance (optional) and the AC power cord

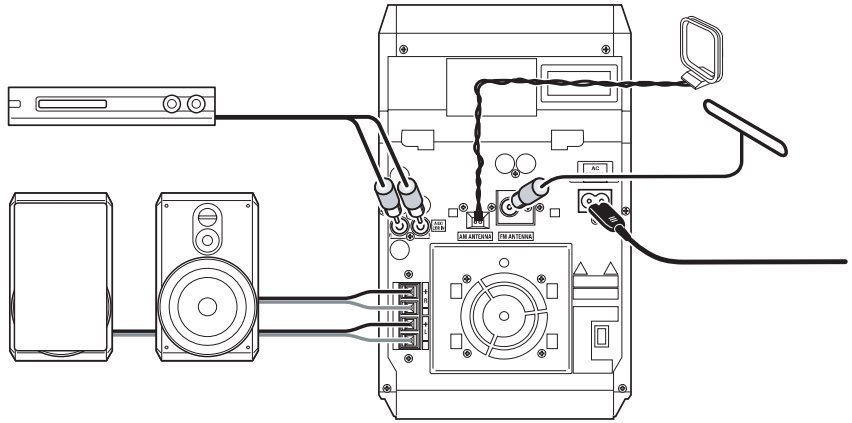

1 Connect the speaker cables to the MC W770.
Use the supplied speakers only. Using other speakers can damage the set or the sound quality will be negatively affected.

2 Connect the AM/MW antenna.

3 Connect the FM antenna.

4 If you want to connect an additional appliance , use a cinch cable to connect the audio inputs of the MC W770 to the audio outputs of the additional appliance.

5 Check whether the mains voltage as shown on the type plate corresponds to your local mains voltage . If it does not, consult your dealer or service organisation.

Make sure all connections have been made before switching on the mains supply.

Connect the AC power cord supplied to AC MAINS ~ and to the wall socket.

3 Install the tuner

1 When the AC power cord is connected for the first time to the wall socket, TUNER and AUTO INSTALL – PRESS PLAY are displayed.

2 Press ▶II on the set to store all available radio stations automatically.
→ Automatic searching and storing starts. Once completed, the last tuned radio station will be played.

4 Install the wireless connection to your PC

PC system requirements:
- **Windows 98SE/ME/2000/XP**
- **Pentium Class 300MHz processor or higher**
- **CD-ROM drive**
- **USB port**
- **Free hard disk space: 100 MB for the software**

Do not connect the wireless USB adapter immediately! You will be asked during the installation process to connect it.

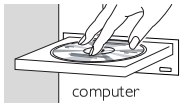

1 Place the set as close as possible to the PC.

2 Switch on your PC and insert the installation disc.

Note: Do not use the icon, which will appear on the PC screen during the installation process.

3 The installation guide will appear automatically. If it does not, go to the CD-ROM drive in Windows Explorer and double click on the **SETUP_.exe**. Then continue as follows:
- Select your desired language from the list.
- Select **Installing Software** and then select **Quick Installation** and click **Install**.
- Then follow the installation steps prompted by the screen to install the wireless USB adapter driver, the Philips Media Manager software and the network setup.

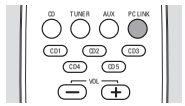

4 Switch on the set and press PC LINK.

5 During the network setup you will be asked to go to the install mode: Press and hold PC LINK for 5 seconds.
→ PC LINK is displayed and INSTALLING is scrolled. The set searches for a connection to the PC.

When the installation has been finished successfully:
→ PC LINK and COMPLETED are displayed. The demo track from the installation disc starts to play automatically.

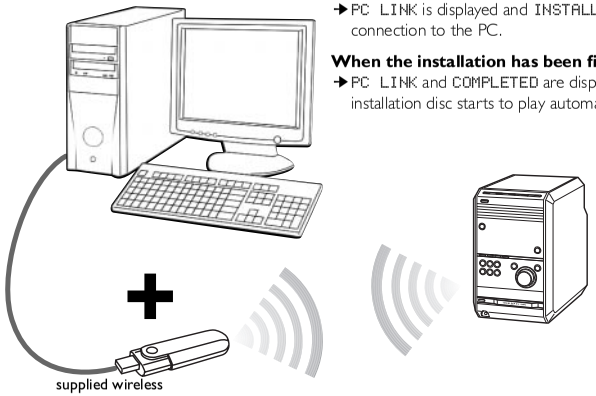

5 Play your music collection from the PC via the set

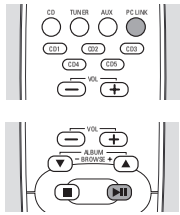

1 At installation time or later add your MP3 music folders and files to the Philips Media Manager. Only those folders and files you can see in the Philips Media Manager will be accessible from the MC W770.

2 Make sure your PC is switched on.

3 Press PC LINK to select the PC as source.

4 As soon as the connection is established:
→ PC LINK is displayed and a track name is scrolled.

5 Press ▶II to start playback.
→ PC LINK is displayed and the track name is scrolled.
→ PC LINK and the elapsed playing time are displayed.

6 Play your discs on the set

For playback on this set you can use:
- **All pre-recorded audio CDs**
- **All finalised audio CDR and CDRW discs**
- **MP3-CDs (CD-ROMs with MP3 tracks)**

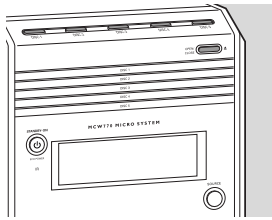

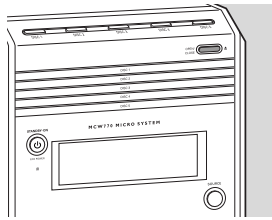

1 Press OPEN/CLOSE ▲ on the set.

2 Press one of the disc keys (DISC 1, DISC 2, DISC 3, DISC 4, or DISC 5) on the set to select the desired disc tray to be opened.

3 Load a disc with the printed side up.

4 Press OPEN/CLOSE ▲ again on the set to close the tray.

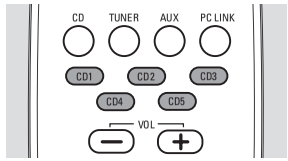

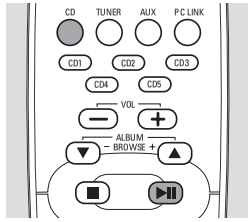

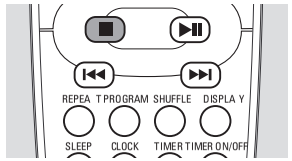

5 ***If you want to play one particular disc:***
Press one of the disc keys CD 1, CD 2, CD 3, CD 4, or CD 5 on the remote control to start playback of the desired disc in the selected tray.

If you want to play all loaded discs:
Press CD on the remote control. Then press ▶II to start playback.

○ To stop playback press STOP ■.

7 Setting the clock

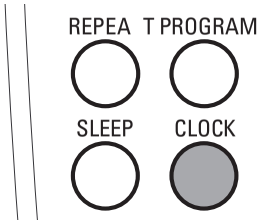

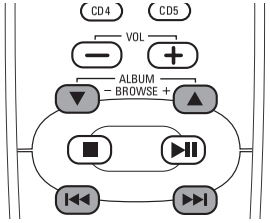

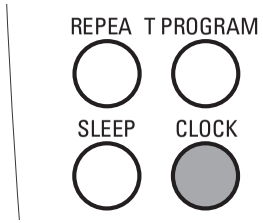

1 Press and hold CLOCK on the remote control for more than 2 seconds.
→ SET CLOCK is displayed, the hours and minutes digits start blinking.

2 Press ALBUM▲or ALBUM ▼ on the remote control repeatedly to set the hour.

3 Press ⏮ or ⏭ on the remote control repeatedly to set the minutes.

4 Press CLOCK on the remote control to confirm the setting.
→ The clock shows the set time.

8 Timer setting

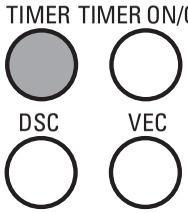

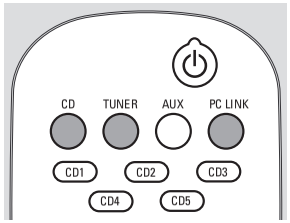

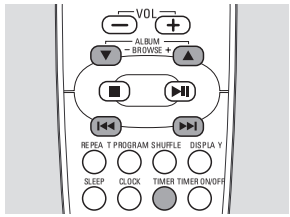

1 Press and hold TIMER on the remote control for more than 2 seconds.
→ ⏲ starts blinking, SET TIMER is displayed and the hours and minutes digits start blinking.

2 Press CD, TUNER or PC LINK on the remote control to select the source you want to be woken up with.

3 Press ALBUM ▲ or ALBUM ▼ on the remote control repeatedly to set the hour.

4 Press ⏮ or ⏭ on the remote control repeatedly to set the minutes.

5 Press TIMER on the remote control to confirm the setting.

9 Demonstration mode

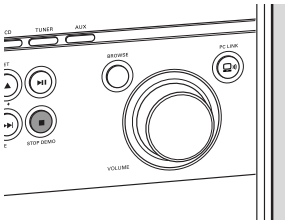

To activate the demonstration mode press and hold STOP DEMO ■ for 5 seconds during standby or Eco Power standby on the set until DEMO ON is displayed

To deactivate the demonstration mode press and hold STOP DEMO ■ again on the set for 5 seconds until DEMO OFF is displayed

English

Frequently asked questions

Important

Do not plug in the wireless USB adapter into a USB port of your computer, but start with the software installation first from the CD-ROM. After the necessary driver software has been installed you will be asked by the installation software to plug in the wireless USB adapter. This order of installation will ensure the proper function of your wireless USB adapter.

Wireless USB adapter

Question	Answer
I have plugged in the wireless USB adapter and completed the installation in Windows without installing the software from the bypacked CD-ROM first. What should I do?	In order that you can install the correct driver software for the wireless USB adapter, please do the following: **1** Open Windows **Start Menu/Settings/ Control Panel/System/Hardware/ Device Manager** **2** Select **Other Devices** and delete the USB WLAN device. **3** Unplug the wireless USB adapter. **4** Start the installation from the CD-ROM with **unplugged** wireless USB adapter! **5** You will be asked during the installation to plug in the adapter again.
I have followed the instructions for use and the instructions shown on the installation software exactly but cannot successfully install.	Possibly you have a problem with the quality of the wireless link. We propose using the extension cable which is delivered with the MCW770 Philips audio system and placing the wireless USB adapter as close as possible to the front side of the MCW770. Start the installation again.
Since I have changed the USB port for the wireless USB adapter I have longer connection times from my MCW770 audio system to the PC.	Your installation was optimised for the first USB port used. In order to decrease connection time for the new USB port, you have to configure the new USB port for your PC link network. Select from the CD-ROM setup the **Network Utilities** and then the **Install different USB port** menu. Follow the instructions of the setup programme. For more information please refer to the IFU chapter "Change of USB port using the MCW770".

Frequently asked questions

I have lost my bypacked wireless USB adapter, what can I do?	You can order the wireless USB adapter at your local Philips Service organisation. The MC W770 PC link mode will also work with most other WiFi certified wireless adapters. But you have to perform a complete new setup, and a big part of the network setup has to be done manually. First install the new wireless adapter according to its manual. Use the MC W770 installation disc and select **Setup Network.** Continue the installation according IFU chapter "Using a different wireless network adapter". Your stored music files will not get lost.

Philips Media Manager Software

Question	Answer
Why can the tracks stored in my PC not be played even though I have successfully installed PC link?	Through PC link you have access only to those music files which are in the library of the Philips Media Manager software. The IFU chapter Preparation for wireless PC Link playback function describes how you can add MP3 music files to the Philips Media Manager.
How can I organise my tracks in the music library and in the MC W770 PC Link view?	Edit the Album, Title and other ID3 Tag information of your MP3 files with the Philips Media Manager software, so you can group your songs accordingly. To edit ID3 information select the track(s) you'd like to edit, right click and select the 'Edit Media Information…' from the popup menu.
If I already have a Musicmatch software installed in my PC, can I skip the installation of Musicmatch which comes with the CD-ROM?	Your Musicmatch software has to support the UPnP™ server function in order to be able to connect your Philips audio system MC W770 to your PC. We recommend installing the Musicmatch version from the CD-ROM.
How can I get a newer version of the Philips Media Manager?	You can download the latest version of the Phlips Media Manager from http://www.my.philips.com

English

Frequently asked questions

Can I use other music archiving software than Philips Media Manager?	You can use another music archiving system than Philips Media Manager under condition that it provides an Universal Plug and Play (UPnP™) server interface.

Universal Plug and Play

Question	Answer
What is Universal Plug and Play?	Universal Plug and Play (UPnP™) allows easy interoperability of devices supporting this network techology. UPnP™ builds on standard networking technologies and provides standardized protocols for a wide variety of home and small business devices.
What does Universal Plug and Play mean for MC W770?	MC W770 implements the UPnP™ technology to get access, navigate and stream audio from a UPnP™ music server.

Network setup and system configuration

Question	Answer
Can I have more than one PC (server) to connect to this audio system?	Yes, you can add more than one PC (server) to your audio system's configuration. Start the CD-ROM installation on a PC which you want to add to your audio system and choose **Add new PC server** from the **Custom Installation** menu. Follow the instructions of the setup programme. For more information please refer to the IFU chapter "Installation of an additional PC server or recovery of PC link settings on your PC".
Can I have more than one network to connect to this audio system?	Yes, you can connect your audio system to more than one network. Each network configuration has to be added to your audio system using the installation CD. For more information please refer to the IFU chapter "Integration of MC W770 into an existing (home) network". When installed, browse through the installed networks using the ⏮, ⏭ keys while the display shows NETWORK in the first line. The network's name is scrolled in the second display line. Select a network by pressing the key on your set.

What maximum number of networks can be installed with Philips audio system MC W770?	You can install 5 different networks.
Can I have more than one Philips audio system MC W770 to connect to my PC?	Yes, you can connect more than one Philips audio system MC W770 to your PC. In the CD-ROM installation select **Custom Installation** and then the **Add additional Audio System** menu. Follow the instructions of the setup programme. For more information please refer to the IFU chapter "Installation of an additional audio system or recovery if audio system PC link settings are lost."
Can I use my built-in wireless LAN card in my PC to set up the communication with the audio system?	Yes, you can use the built in wireless Lan card of your PC, but you have to setup in Windows a network with this network adapter first. Then use the **Custom Installation** menu from the CD-ROM setup and choose **Network Setup** to add the same network configuration to the audio system. Follow the instructions of the setup programme. For more information please refer to the IFU chapter "Using a different wireless network adapter".
I want to use the PC link function in a wireless network which is already installed. What can I do?	The MC W770 is meant to be used with the bypacked wireless adapter. However, it is possible to use the MC W770 together with most other WiFi certified wireless adapters as well as in infrastructure mode networks using Access Point. Use the **Custom Installation** menu from the CD-ROM setup and choose **Network Setup**. In this advanced setup mode you can add to your audio system the network configuration of your home network. Please note that in this network at least one PC needs the Philips Media Manager installed and active. For more information please refer to the IFU chapter "Integration of MC W770 into an existing (home) network

When I press the PC LINK **button, the display shows** NO CONNECTION. **What can I do?**	If you receive this message you might need to restart your Philips Media Manager. To restart the Philips Media Manager, click on its icon on the taskbar and select "Shutdown Philips Media Manger'. Restart the application from the Windows Start menu.
Can PC link work when the PC is in standby?	PC link cannot work when the PC is switched off or in standby.

UPnP™ is a certification mark of the UPnP™ Implementers Corporation.

DISMANTLING INSTRUCTIONS

Dismantling the *Top Cover*

- Remove 2 screws as shown in picture 1.
- Raise top cover at the rear and move it frontwards to disengage catches.

Note: the top cover is pre-fixed with burls protruding into a hole. Raising the top cover might need some force. If necessary use a bladed screwdriver.

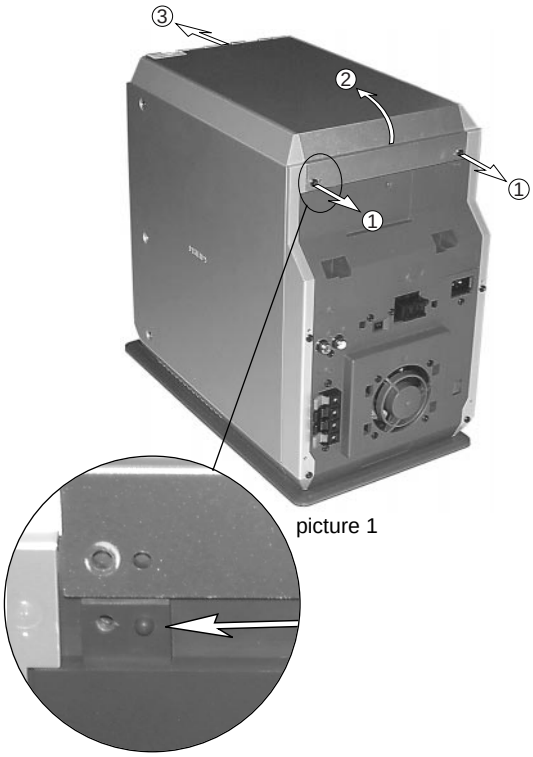

picture 1

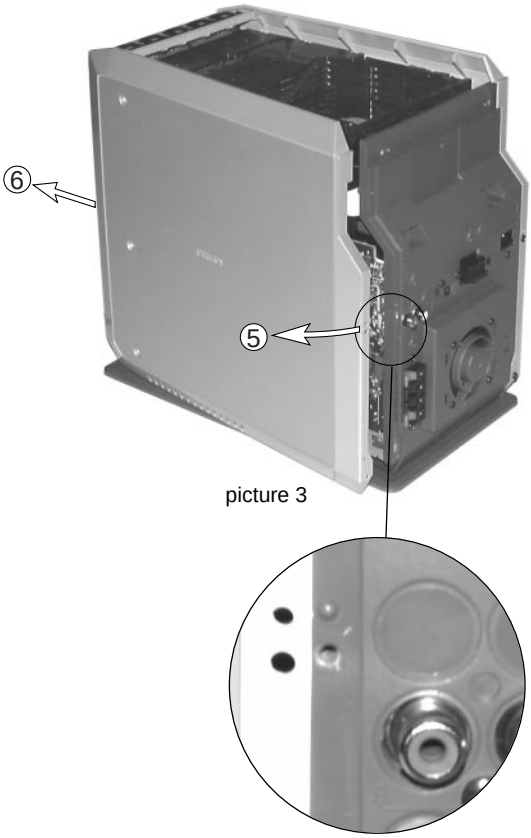

picture 3

Dismantling the *Cabinet Side panels*

- Dismantle top cover first.
- Remove 4 screws as shown in picture 2.
- Pull off side panel at the rear as shown in picture 3 and move it frontwards to disengage catches.

Note: the side panels are pre-fixed with burls protruding into a hole. Pulling off at the rear might need some force. If necessary use a bladed screwdriver.

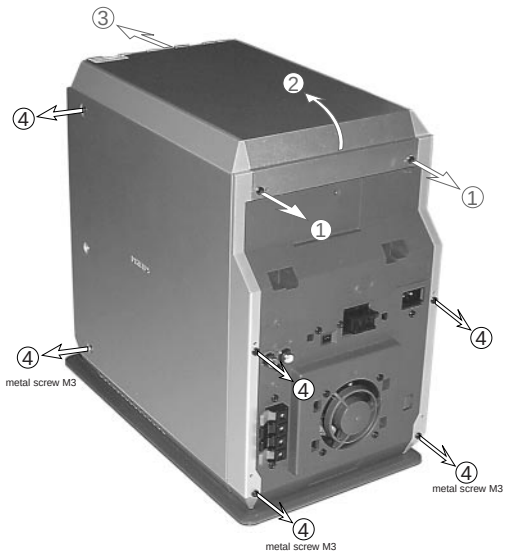

picture 2

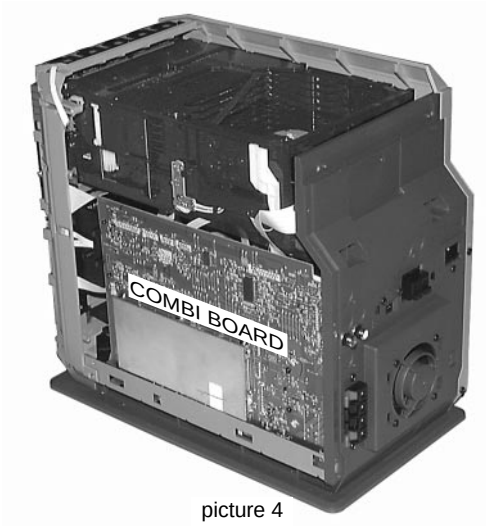

picture 4

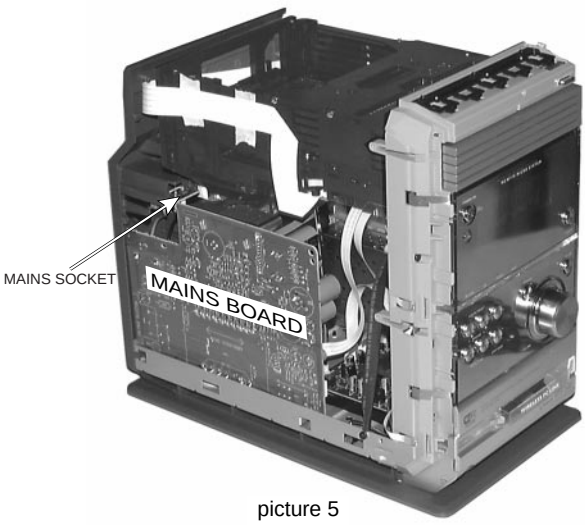

picture 5

DISMANTLING INSTRUCTIONS

Dismantling the *5 Disc Tray Changer*

- Dismantle top cover and cabinet side panels first.
- Remove 4 screws as shown in pictures 6 and 7.
- Raise the changer unit at the rear and pull it out of the set.

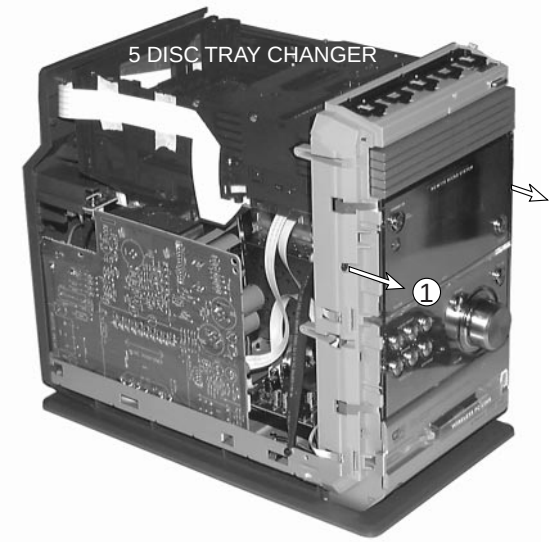

picture 6

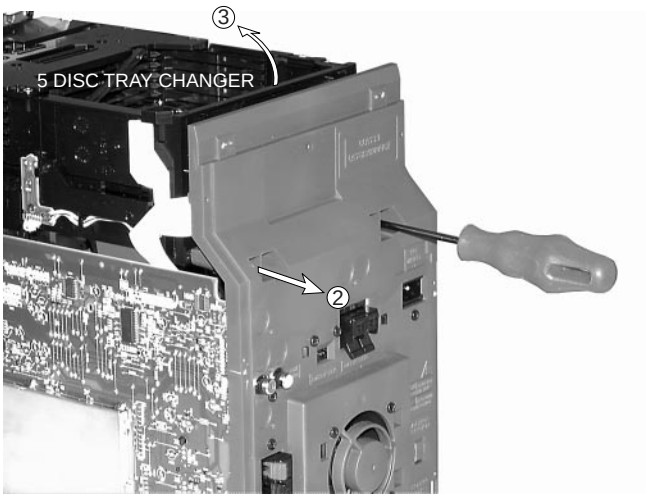

picture 7

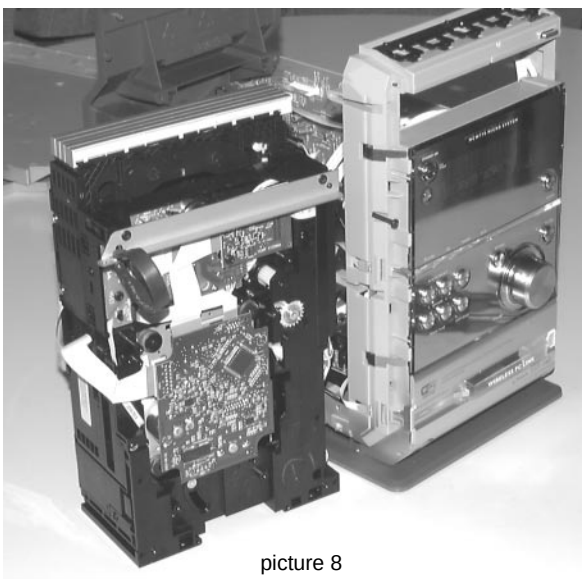

picture 8

Dismantling the *Combi Board*

- Dismantle top cover and cabinet side panels first.
- Remove 3 screws as shown in pictures 9.
- Remove 2 screws fixing the 5DTC.
  It is advised to dismantle the 5DTC completely.
- Release 2 catches of the rear cabinet and move it backwards to get access to the cooling fin.
- Remove 1 screw fixing the cooling fin to the bottom plate → see picture 10.
- Release catches on front side as shown in picture 9 and fetch Combi Board out of the set.

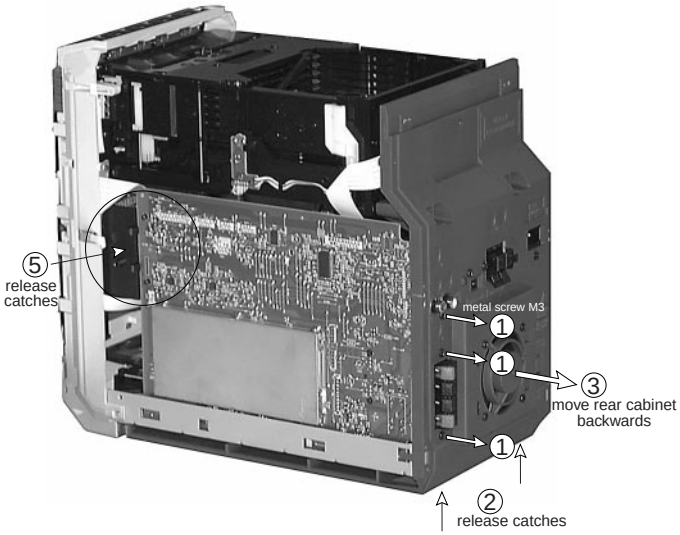

picture 9

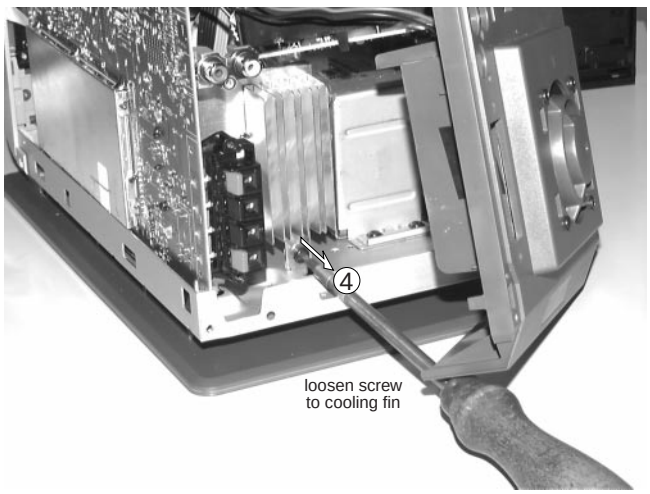

picture 10

DISMANTLING INSTRUCTIONS

Dismantling the *Front Board*

- Dismantle top cover, cabinet side panels and 5DTC first.
- Remove 2 screws at bottom side as shown in pictures 11.
- Remove 1 screw fixing the ground connection.
- Remove 1 screw fixing the Wessli Board to bottom plate.
- Release catches on front side of Combi Board as shown in picture 13.
- Release catches of front cabinet on left and right side and move front assy frontwards until it becomes free.
- Turn the whole unit to a proper service position as shown in picture 14.

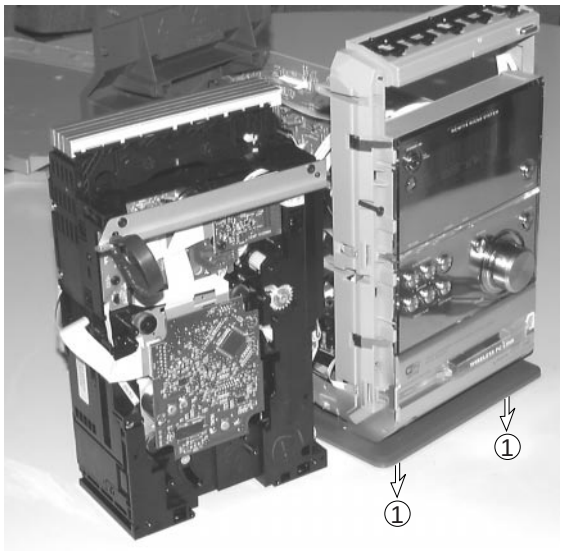

picture 11

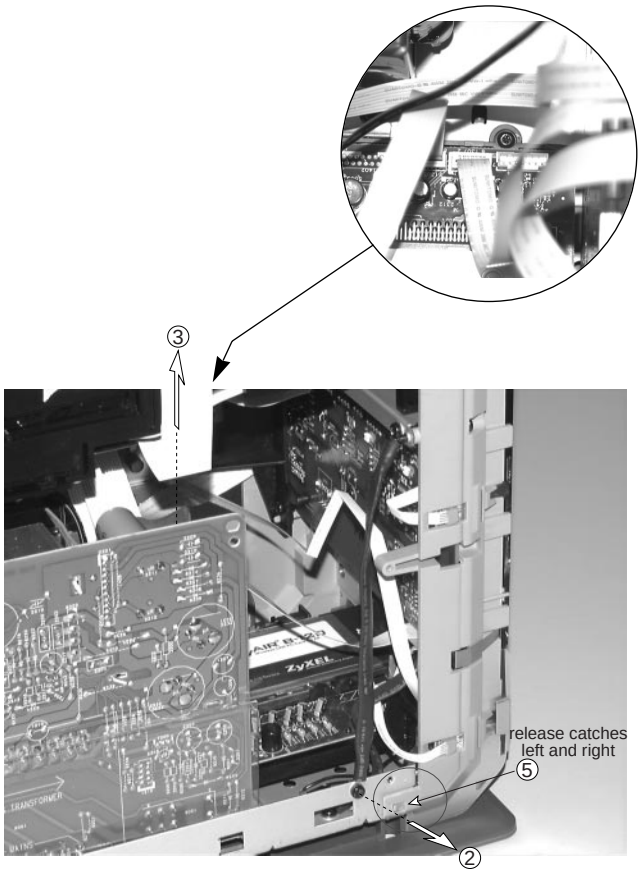

picture 12

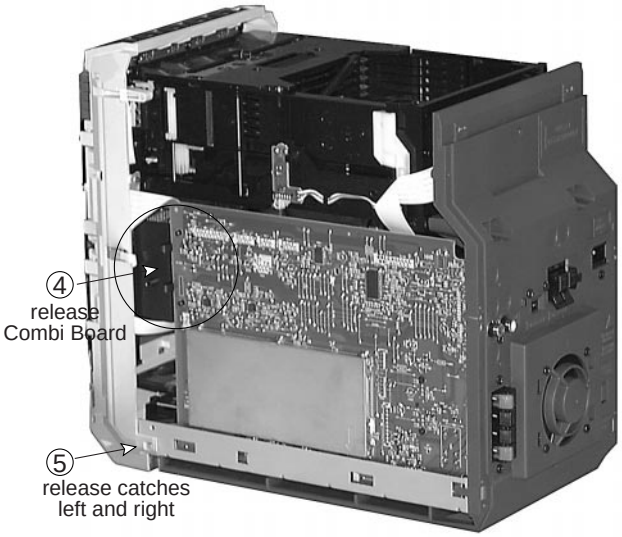

picture 13

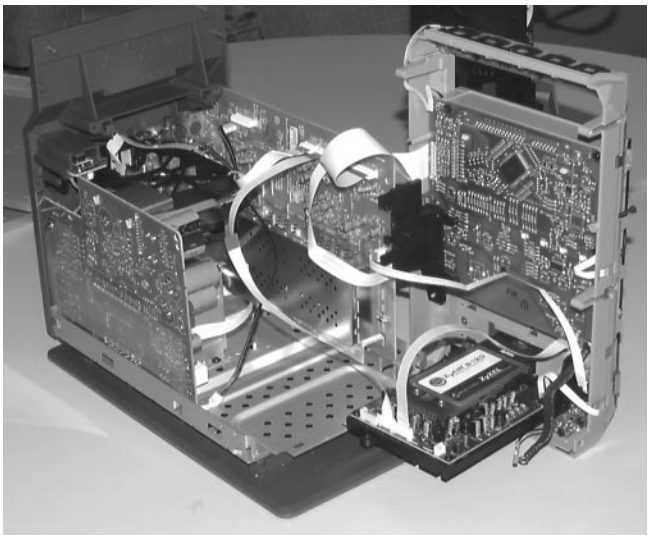

picture 14

DISMANTLING INSTRUCTIONS

Dismantling the *Tuner Board*

- Dismantle top cover and right cabinet side panel first.
- Remove 2 (3 for US version)screws from the antenna sockets.
- Release 2 catches and fetch the tuner module out of the set.
- Position the unit to a proper service position as shown in picture 15.

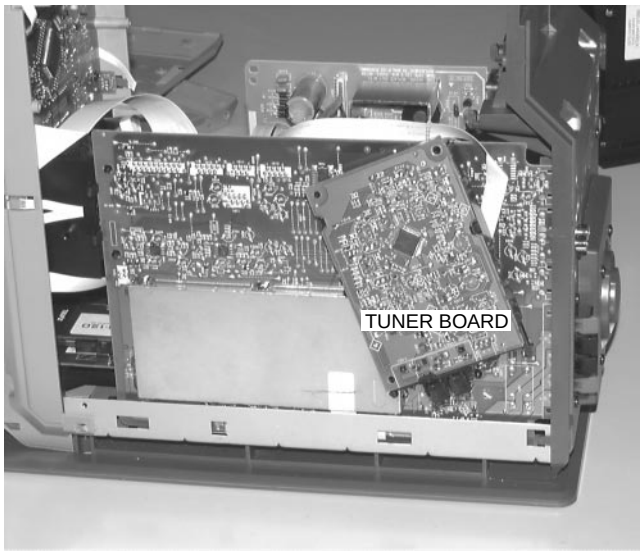

picture 15

SERVICE HINTS

SERVICE TOOLS

TORX T10 screwdriver with shaftlength 150mm 4822 395 50423
TORX screwdriver set SBC 163 .....4822 295 50145

Audio signal disc SBC 429.....4822 397 30184
Playability test disc SBC444 .....4822 397 30245
Test disc 5 (disc without errors) +
Test disc 5A (disc with dropout errors, black spots and fingerprints)
SBC 426/426A 4822 397 30096
Burn in test disc (65 min. 1kHz signal at -30dB level without "pause") ...4822 397 30155

DEMO MODE

The DEMO MODE displays various features of the set.

The Demo mode can be switched on/off as follows:

Press the [STOP DEMO] key on the set at least for 5s.
→ Display shows
DEMO ON else DEMO OFF

DEALER MODE

The sets are equipped with a special DEALER MODE.
This mode allows an automatic feature presentation when a dedicated 'demo CD' is detected in tray1.
When the DEALER MODE is switched on and this dedicated 'demo CD' is detected in tray1 Open/Close for tray 1 is blocked to prevent customers from fetching out CDs from exhibition sets. All keys except PC-LINK key and STAND BY-ON key are locked when the disc is playing.

The Trade mode can be switched on/off as follows:
Press the [HOME] key on the set at least for 5s.
→ Display shows
DEMO ON else DEMO OFF

LEAD FREE PRODUCED SET

This set is manufactured with lead-free production technology. This is also indicated by the PHILIPS-lead-free logo you find on the printed boards.

The set is produced with lead-free solder-alloy as well as with lead-free sub-parts. It can be considered as lead-free. Due to this fact some rules have to be respected by the workshop during a repair:

- Use only lead-free soldering-tin Philips SAC305 with order code 0622 149 00106. If lead-free solder-paste is required, please contact the manufacturer of your solder-equipment.
- Use only adequate solder tools applicable for lead-free soldering-tin.
- Adjust your solder tool so that a temperature around 217° – 220° is reached at the solder joint.
- Do not mix lead-free soldering-tin with leaded soldering-tin. This would lead to unreliable solder joints.
- On our website http://www.atyourservice.ce.philips.com you find more information to
  – aspects of lead-free technology
  – BGA-de-/soldering, heating-profiles of BGAs used in Philips-sets, and others.

PERSONAL NOTES:

5-3

SERVICE TESTPROGRAM
PART 1

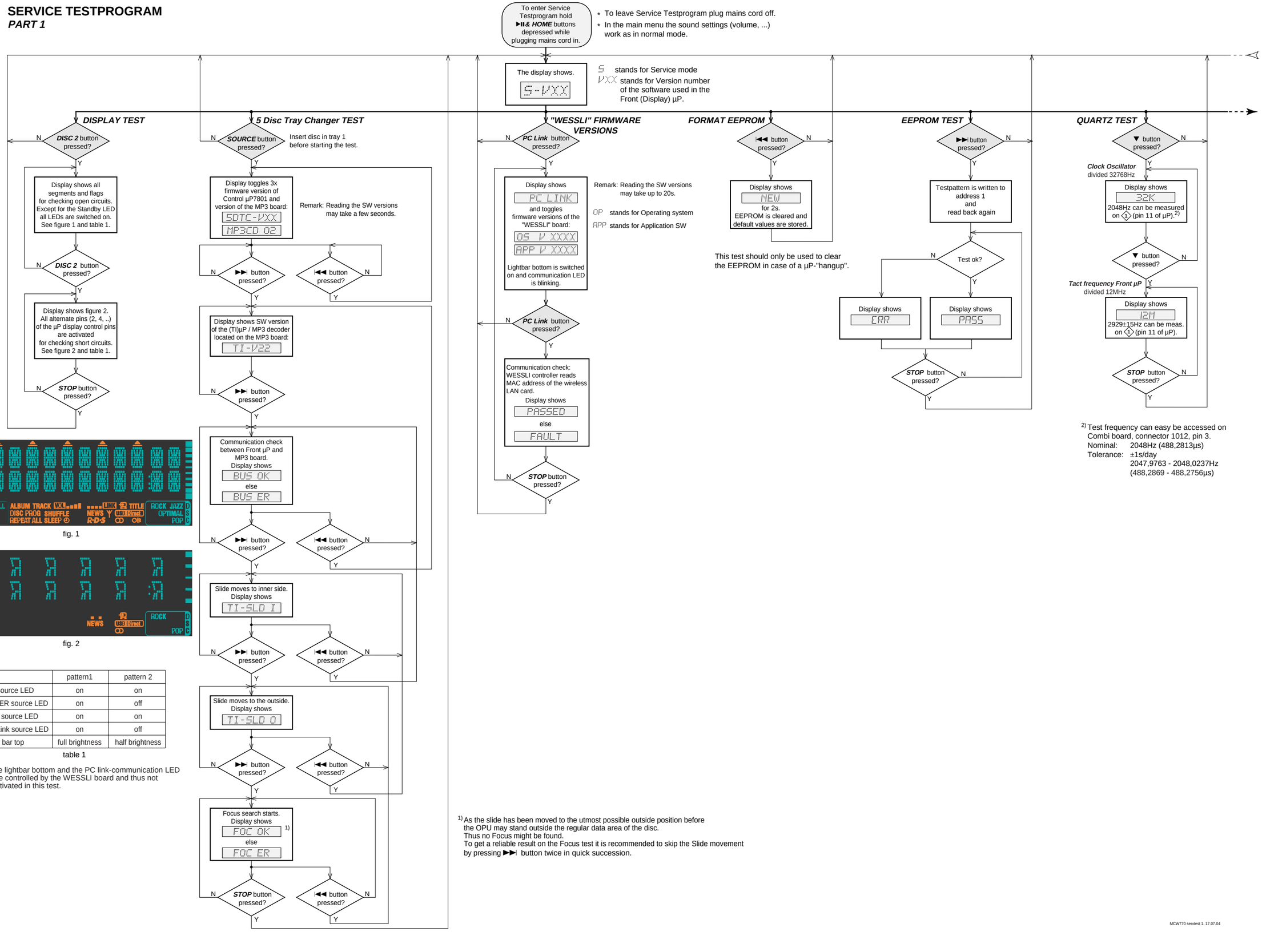

fig. 1

fig. 2

	pattern1	pattern 2
CD source LED	on	on
TUNER source LED	on	off
AUX source LED	on	on
PC Link source LED	on	off
Light bar top	full brightness	half brightness

table 1

Note: the lightbar bottom and the PC link-communication LED are controlled by the WESSLI board and thus not activated in this test.

1) As the slide has been moved to the utmost possible outside position before the OPU may stand outside the regular data area of the disc. Thus no Focus might be found. To get a reliable result on the Focus test it is recommended to skip the Slide movement by pressing ▶▶| button twice in quick succession.

2) Test frequency can easy be accessed on Combi board, connector 1012, pin 3.
Nominal: 2048Hz (488,2813µs)
Tolerance: ±1s/day
2047,9763 - 2048,0237Hz
(488,2869 - 488,2756µs)

5-4

SERVICE TESTPROGRAM
PART 2

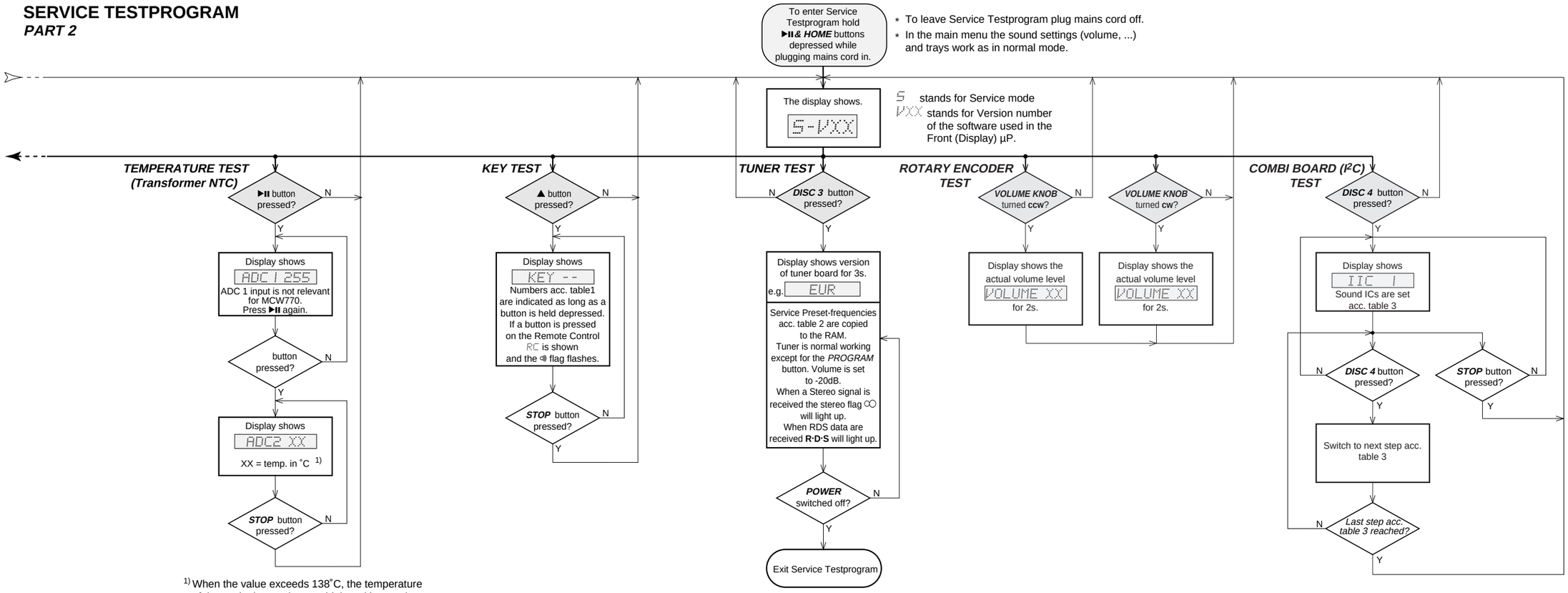

[1] When the value exceeds 138°C, the temperature of the set is detected as too high and in turn the set will be switched to Standby mode.
This can also be caused by the *Overvoltage Protection circuit*, switching the NTC line to ground.

KEY CODES

KEY	KEY CODE	KEY	KEY CODE
CD1	1	ALBUM - ▼	9
CD2	2	ALBUM + ▲	10
CD3	3	PLAY ▶II	11
CD4	4	HOME	12
OPEN/CLOSE	5	WL PC LINK	13
CD5	6	I◀◀	14
STANDBY-ON	7	▶▶I	15
SOURCE	8	■ (exit)	16

table 1

SERVICE PRESET FREQUENCIES

REGION / PRESET	EUR ***EUROPE*** ***FM/MW*** /22	EAS ***USA*** ***FM/AM*** /37	OSE ***OVERSEAS*** ***FM/MW*** [2] Grid switchable 10-100kHz/9-50kHz /21
1	87,5 MHz	65,81 MHz	87,5 MHz
2	108 MHz	108 MHz	108 MHz
3	531 kHz	530 kHz	530/531 kHz
4	1602 kHz	1700 kHz	1700/1602 kHz
5	558 kHz	560 kHz	560/558 kHz
6	1494 kHz	1500 kHz	1500/1494 kHz
7		98 MHz	98/87,5MHz
8			
9			
10			
11	98MHz	87,5 MHz	87,5/98MHz

table 2

[2] To toggle frequency grid hold ***ALBUM+ ▲ & HOME*** buttons depressed while plugging mains cord in.
Display will show either GRID 9 or GRID 10 for 2 s.

TEST STEPS COMBI BOARD I²C TEST

STEP	SOURCE	BASS	TREBLE	VOLUME	IS	MUTE
IIC 1	AUX	0dB	0dB	-20dB		
IIC 2	AUX	0dB	0dB	-20dB	on	
IIC 3	AUX	0dB	0dB	-20dB		on
IIC 4	AUX	0dB	0dB	-20dB		on
IIC 5	TUNER[3]	0dB	0dB	-20dB		
IIC 6	PC LINK[3]	0dB	0dB	-20dB		
IIC 7	CD[3]	0dB	0dB	-20dB		
IIC 8	AUX	+2dB	+3dB	-20dB		
IIC 9	AUX	0dB	+3dB	0dB		
IIC 10	AUX	+6dB	-6dB	-18dB		
IIC 11	AUX	+4dB	+1,5dB	-18dB		
IIC 12	AUX	0dB	0dB	-20dB		
IIC 13	step 13 to 17 are intended for factory tests only					
IIC 14						
IIC 15						
IIC 16						
IIC 17						
exit	AUX	0dB	0dB	-20dB		

BASS set to ≤0dB --> BASS ALC=off table 3

[3] Tuner, WESSLI board respectively the CDC module are not switched on in these steps. To check the inputs a signal has to be fed directly to Combi board, sockets 1013, 1022 respectively 1015

6-1

BLOCK DIAGRAM

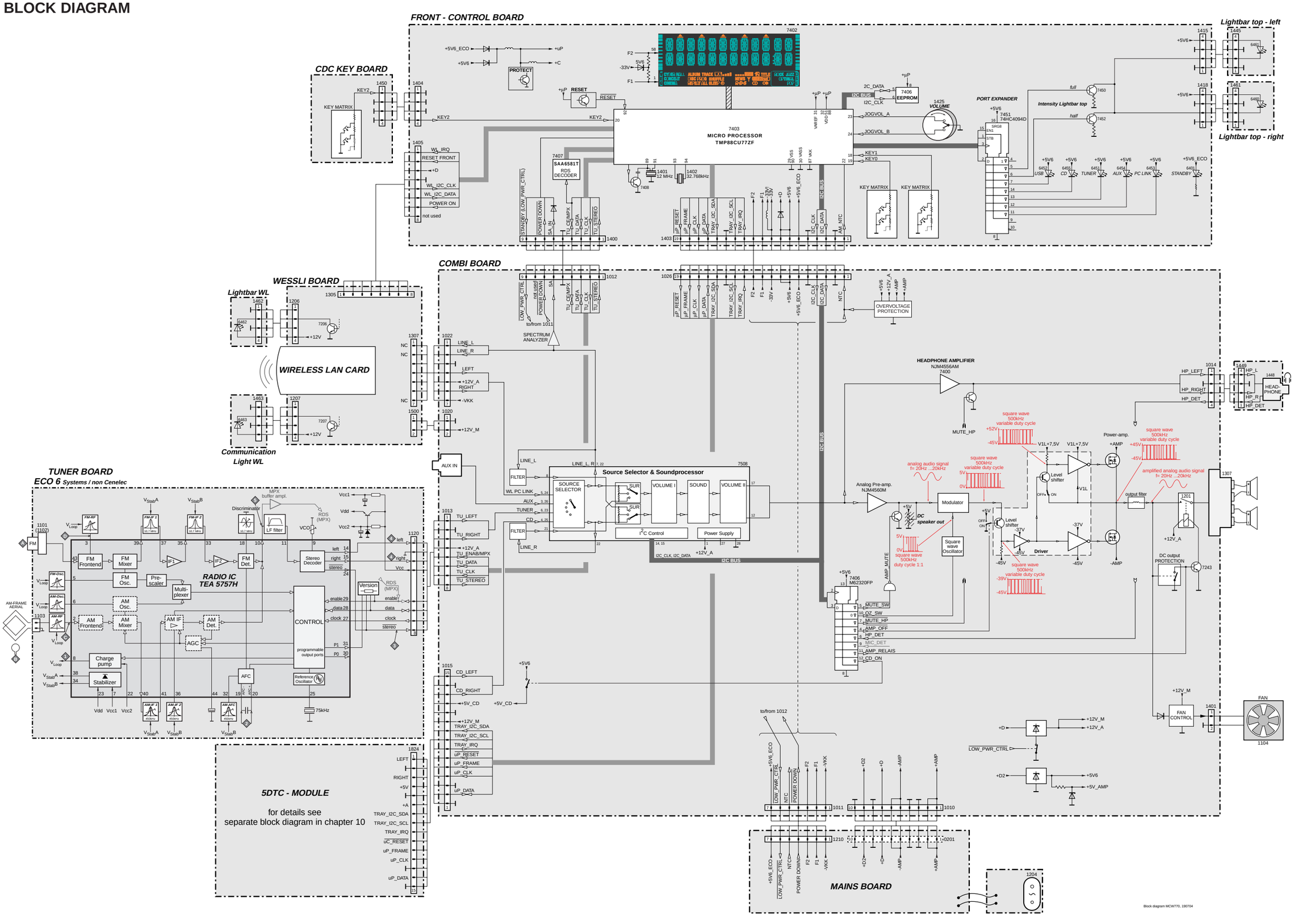

Block diagram MCW770, 190704

6-2

SET WIRING DIAGRAM

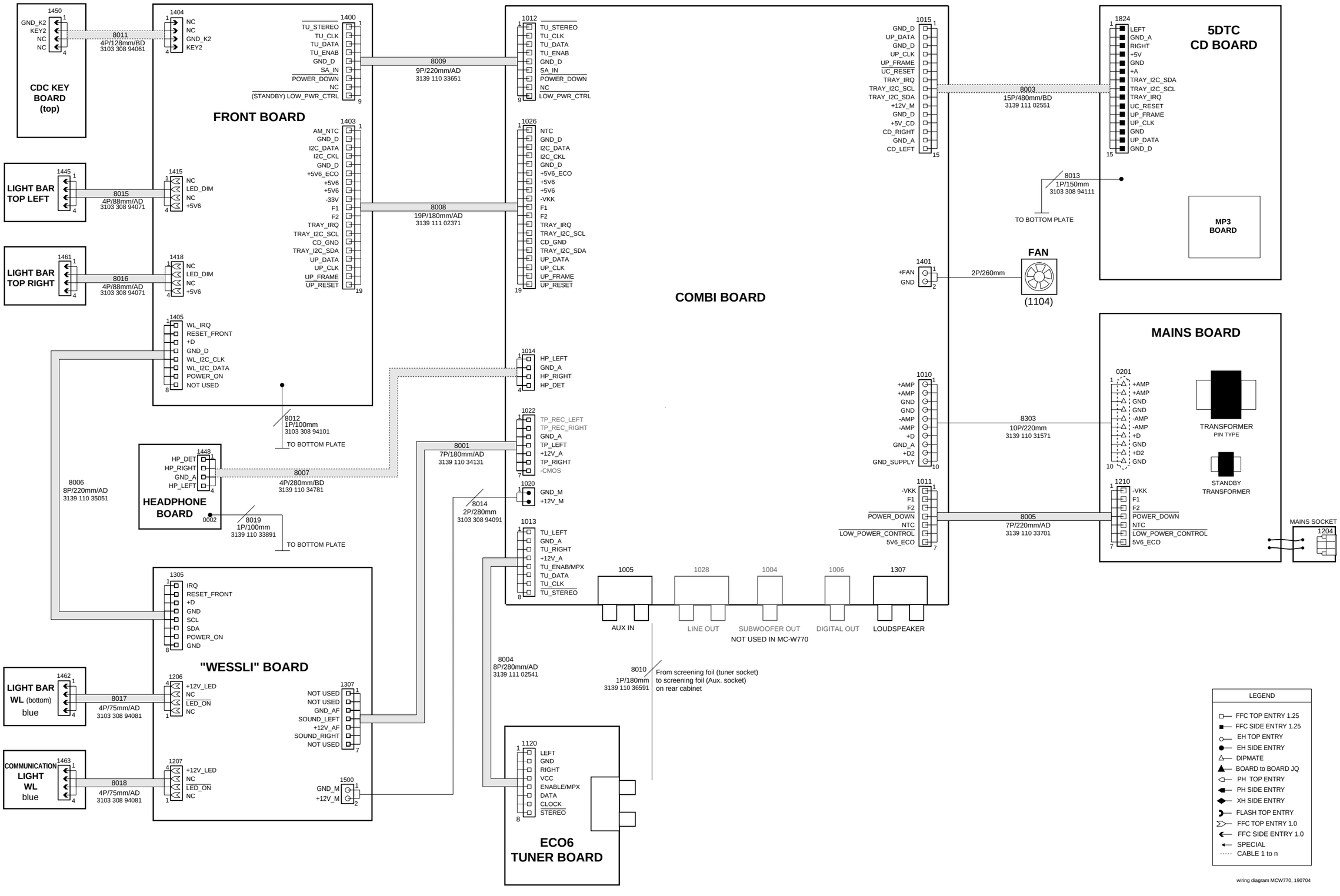

7-1

1 FRONT BOARD

Grid Buffer
7400 BC847B
7401 BC847B
7402 14-BT-82GNK
7403 TMP88CU77ZF
7404 BC847BW
7405 TSOP48362ZC1
7406 M24C04 EEPROM
7407 SAA6581T
7408 BC847BW
CPU
RAM
ROM
VFT - DRIVER - CIRCUIT
ADRESS / DATA - BUS
VFT - DRIVER PE
VFT - DRIVER PD
VFT - DRIVER P9
VFT - DRIVER P8
VFT - DRIVER PF
VFT - DRIVER P7
VFT - DRIVER P6
CPU - CLK
P0 I/O
P1 3-STATE I/O
P2 I/O
P3 3-STATE I/O
P4 ANALOG IN 3-STATE I/O
P5 ANALOG IN 3-STATE I/O
IR EYE
RESET
RDS DECODER for /22 only
FREQUENCY SHIFT (for search tuning)
CLOCK OSC.
PROTECTION CIRCUIT
VERSION DETECTION (assembled, but not used by SW)
CDC KEY BOARD TOP
OPEN/CLOSE
Rectifier Spectrum Analyzer
Use service testprogram: QUARTZ TEST oscillator frequencies can be measured at this point.
to/from drawing 2
to/from Power/Combiboard 1 1012
to/from Power/Combiboard 1 1026
to Wireless Module ("WessLi" board 1305)
not used
for provision only
3531, 3532 for non-RDS versions /21 and /37 only
...V DC voltages measured in TUNER mode
C401 C-PAD ESD
Front board MCW770, drawing 1, 170704

1400 B13	3454 C9	6407 E1
1401 C3	3455 C4	6408 G13
1402 D4	3456 C9	6409 G13
1403 D13	3457 C4	6410 F1
1404 H6	3458 C9	6411 B2
1405 H9	3459 C9	6412 C2
1406 I9	3460 C9	6413 D2
1407 I4	3461 H2	6414 E2
1450 I6	3462 D9	6415 E2
1451 I7	3463 D9	6416 G1
1452 I7	3464 D9	6417 G1
1454 I7	3465 H1	6418 H1
1456 I8	3466 D9	6419 I1
1458 I8	3467 H1	6420 G11
1460 I9	3468 D9	6450 C11
2400 A1	3469 D9	7400 A1
2401 A2	3470 D9	7401 A2
2402 A5	3471 E4	7402 A10
2403 A10	3472 E9	7403 C5
2404 B10	3473 E11	7404 H2
2405 B10	3474 E3	7405 F3
2406 B12	3475 E9	7406 H8
2407 B12	3476 E13	7407 G3
2408 B12	3477 E4	7408 D3
2409 B13	3478 E9	7410 H12
2410 B10	3479 E3	C401H13
2411 C10	3480 E4	F428 C11
2412 C10	3481 F2	F429 C12
2413 C10	3482 F12	F430 C12
2414 C10	3483 F3	F433 G2
2415 H2	3484 F4	F434 G4
2416 D10	3485 F5	F435 G6
2417 H1	3486 F5	F436 G6
2418 D10	3487 F5	F437 H6
2419 D10	3488 F5	F438 H6
2420 D4	3489 F6	F439 G8
2421 H2	3490 F6	F440 I9
2422 D10	3491 F6	F441 I9
2423 D4	3492 F7	F442 I10
2424 D10	3493 F7	F443 I10
2425 E12	3494 F7	F444 I10
2426 F2	3495 F7	F445 I10
2427 G12	3496 F8	F446 I10
2428 G13	3497 F8	F447 I10
2429 F3	3499 F13	F448 I10
2430 F7	3500 F3	F449 D13
2431 G4	3501 F4	F450 D13
2432 G8	3502 F5	F451 D13
2433 G9	3503 F5	F452 E13
2434 G2	3504 F5	F453 E13
2435 G3	3505 F6	F454 E13
2436 G9	3506 F6	F455 E13
2437 H5	3507 F6	F456 E13
2438 G9	3508 F6	F457 E13
2439 H9	3509 F7	F458 F13
2440 H9	3510 F7	F459 F13
2441 H3	3512 F7	F460 F13
2442 H5	3513 F8	F461 F13
2443 H5	3514 F8	F462 F13
2444 I3	3515 F13	F463 F13
2445 I4	3516 F13	F464 G13
2446 D2	3517 F8	F465 B13
2447 C3	3518 F13	F466 B13
2448 D3	3519 F9	F467 B13
2449 D3	3520 F13	F468 B13
2450 C12	3521 G13	F469 C13
2451 G4	3522 G8	F470 C13
2472 C11	3523 G8	F471 G12
2474 C11	3524 G11	F472 G12
3400 A5	3525 G8	F473 A5
3401 A5	3526 G11	F474 A10
3402 A5	3527 H5	F475 A5
3403 A1	3528 H5	F476 E3
3404 A2	3529 H5	F477 F3
3405 A2	3530 H5	F478 B4
3406 A3	3531 H5	F479 B2
3408 A12	3532 H5	F480 C2
3409 A12	3533 I4	F481 C2
3410 A12	3534 I4	F482 C2
3411 A13	3537 F4	F483 C2
3412 B5	3538 B3	F484 C2
3413 B5	3540 B3	F485 F5
3414 B5	3541 C3	F486 F7
3415 B6	3542 C3	F487 F8
3416 B6	3543 C3	F488 F8
3417 B6	3544 C3	
3418 B6	3545 C3	
3419 B7	3547 D2	
3420 B7	3549 E13	
3421 B7	3550 E13	
3422 B8	3566 C11	
3423 B8	3572 C11	
3424 B8	3573 C11	
3425 B13	3650 H6	
3426 B3	3651 I6	
3427 B13	3652 I7	
3428 B5	3653 I7	
3429 B5	3654 I8	
3430 B5	3655 I8	
3431 B5	3656 I9	
3432 B6	3657 C12	
3433 B6	3658 C12	
3434 B6	3659 C12	
3435 B7	3660 H2	
3436 B7	3661 H6	
3437 B7	3662 G7	
3438 B7	3663 H7	
3439 B8	3710 H11	
3440 B8	3711 H11	
3441 B8	5400 E12	
3442 G4	5401 A6	
3443 B13	5402 A10	
3444 B4	5403 C4	
3445 B13	5404 E12	
3446 B3	5405 G12	
3447 B4	5406 G13	
3448 B9	6400 A4	
3449 C3	6402 B1	
3450 C9	6403 C1	
3451 C4	6404 C1	
3452 C9	6405 D1	
3453 C3	6406 E12	

7-2

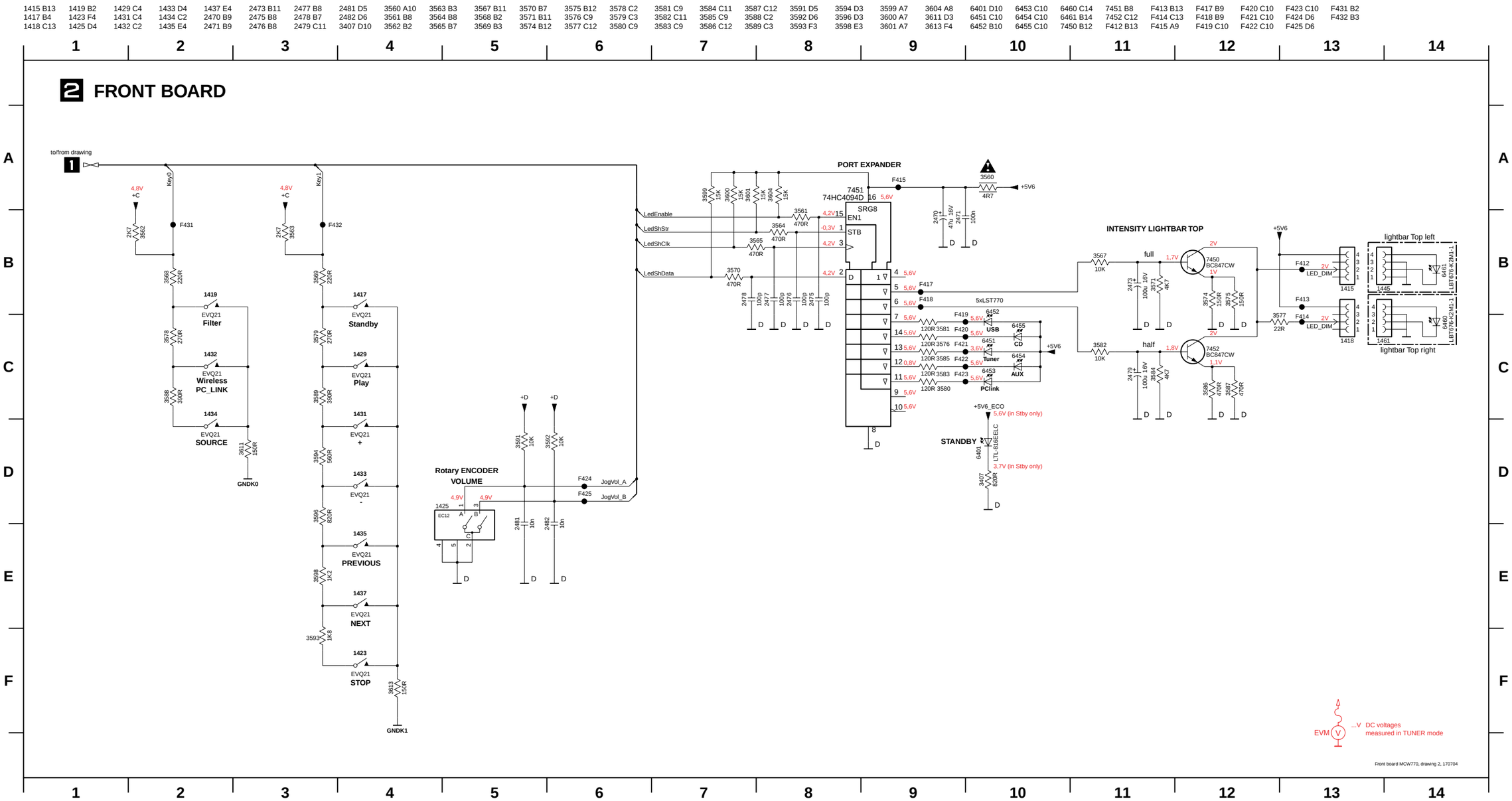
1415 B13 1419 B2 1429 C4 1433 D4 1437 E4 2473 B11 2477 B8 2481 D5 3560 A10 3563 B3 3567 B11 3570 B7 3575 B12 3578 C2 3581 C9 3584 C11 3587 C12 3591 D5 3594 D3 3599 A7 3604 A8 6401 D10 6453 C10 6460 C14 7451 B8 F413 B13 F417 B9 F420 C10 F423 C10 F431 B2
1417 B4 1423 F4 1431 C4 1434 C2 2470 B9 2475 B8 2478 B7 2482 D6 3561 B8 3564 B8 3568 B2 3571 B11 3576 C9 3579 C3 3582 C11 3585 C9 3588 C2 3592 D6 3596 D3 3600 A7 3611 D3 6451 C10 6454 C10 6461 B14 7452 C12 F414 C13 F418 B9 F421 C10 F424 D6 F432 B3
1418 C13 1425 D4 1432 C2 1435 E4 2471 B9 2476 B8 2479 C11 3407 D10 3562 B2 3565 B7 3569 B3 3574 B12 3577 C12 3580 C9 3583 C9 3586 C12 3589 C3 3593 F3 3598 E3 3601 A7 3613 F4 6452 B10 6455 C10 7450 B12 F412 B13 F415 A9 F419 C10 F422 C10 F425 D6
2 FRONT BOARD
to/from drawing
PORT EXPANDER
INTENSITY LIGHTBAR TOP
lightbar Top left
lightbar Top right
Rotary ENCODER VOLUME
STANDBY
Filter
Wireless PC_LINK
SOURCE
Standby
Play
PREVIOUS
NEXT
STOP
GNDK0
GNDK1
LedEnable
LedShStr
LedShClk
LedShData
JogVol_A
JogVol_B
5xLST770
USB
CD
Tuner
AUX
PClink
+5V6_ECO
5,6V (in Stby only)
3,7V (in Stby only)
EVM
...V DC voltages measured in TUNER mode
Front board MCW770, drawing 2, 170704

7-3

FRONT BOARD / copper side view

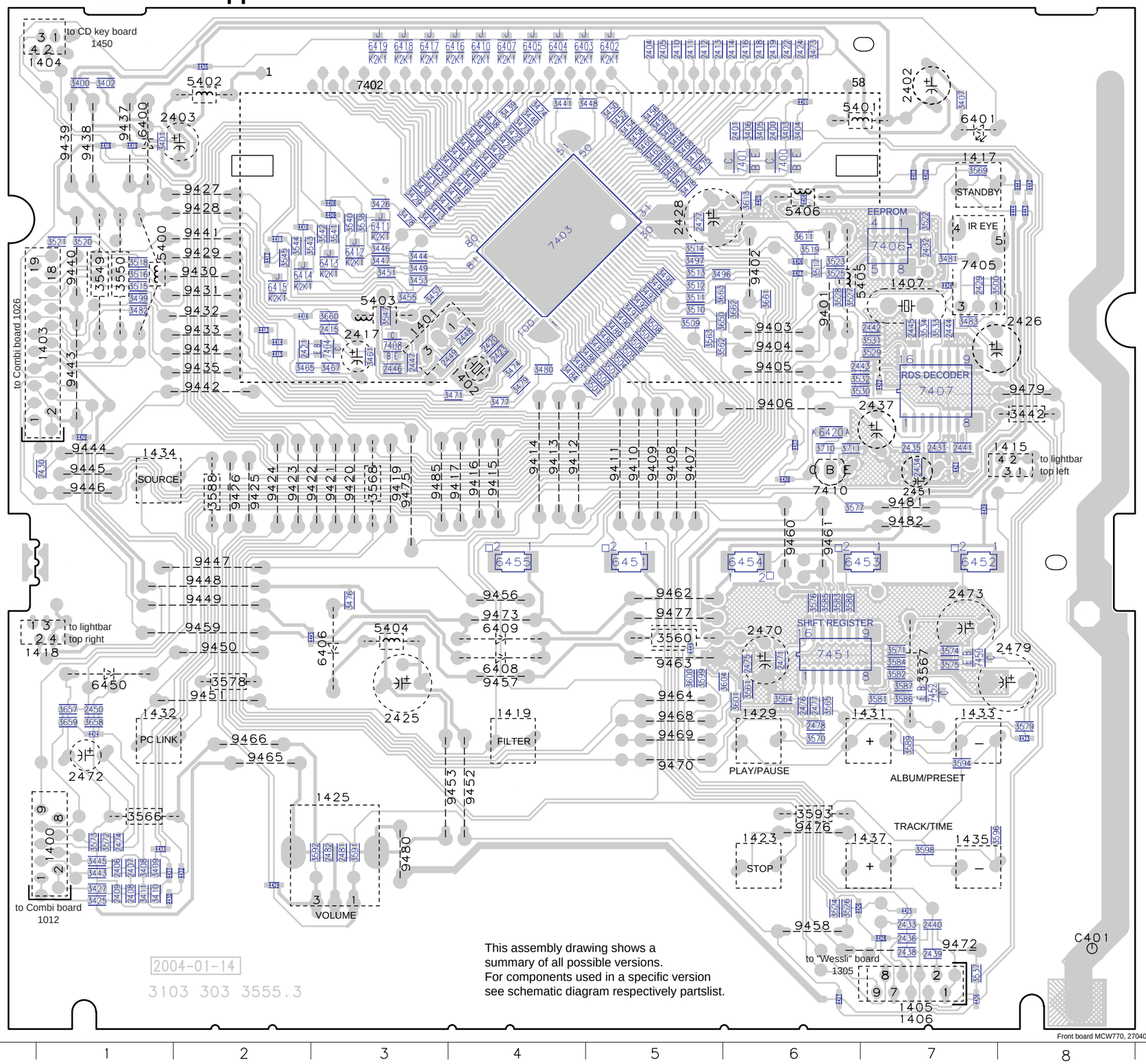

SMD COMPONENTS

2400	A6	3475	A5	4414	B2
2401	A6	3476	D3	4415	C2
2404	A5	3477	C4	4416	B2
2405	A5	3478	A5	4418	A1
2406	F1	3479	C4	4419	A1
2407	F1	3480	C4	4420	C1
2408	G1	3481	B7	4421	C7
2409	G1	3482	B1	4422	C7
2410	A5	3483	B7	4423	E8
2411	A5	3484	C4	4424	E1
2412	A5	3485	C4	4425	G7
2413	A5	3486	C5	4426	G6
2414	A6	3487	C5	4427	G6
2415	B3	3488	B5	4428	G7
2416	A6	3489	B5	4429	F2
2418	A6	3490	B5	4430	G1
2419	A6	3491	B5	4431	F1
2420	C4	3492	B5	4432	F2
2421	C2	3493	B5	4433	F1
2422	A6	3494	B5	4434	B7
2423	C4	3495	B5	4435	A2
2424	A6	3496	B5	4436	G7
2427	B5	3497	B5	4437	C6
2429	B7	3499	B1	4438	C6
2430	C1	3500	B7	4439	D7
2431	C7	3501	C5	4441	A8
2432	B7	3502	C5	4442	A8
2433	G7	3503	C5	4443	B8
2434	C7	3504	C5	4444	B8
2435	C7	3505	C5	4445	E2
2436	G7	3506	C5	4446	E5
2438	G7	3507	B5	6402	A5
2439	G7	3508	B5	6403	A4
2440	G7	3509	B5	6404	A4
2441	C7	3510	B5	6405	A4
2442	B7	3511	B5	6407	A4
2443	C6	3512	B5	6410	A4
2444	B7	3513	B5	6411	B3
2445	B7	3514	B5	6412	B3
2446	C3	3515	B1	6413	B3
2447	C3	3516	B1	6414	B2
2448	B4	3517	B6	6415	B2
2449	C4	3518	B1	6416	A4
2450	E1	3519	B6	6417	A3
2471	E6	3520	B1	6418	A3
2474	F1	3521	B1	6419	A3
2475	E6	3522	B7	6420	C6
2476	E6	3523	B6	6451	D5
2477	E6	3524	G6	6452	D7
2478	E6	3525	B6	6453	D7
2481	F3	3526	G6	6454	D6
2482	F3	3527	B6	6455	D4
3400	A1	3528	B6	7400	A6
3401	A1	3529	C7	7401	A6
3402	A1	3530	C6	7403	B4
3403	A6	3531	B7	7404	C3
3404	A6	3532	C6	7406	B7
3405	A6	3533	B7	7407	C7
3406	A6	3534	B7	7408	C3
3407	A7	3537	G7	7450	E7
3408	F1	3538	B3	7451	E6
3409	F1	3540	B3	7452	E7
3410	G1	3541	B3		
3411	G1	3542	B3		
3412	B3	3543	B2		
3413	B3	3544	B2		
3414	A3	3545	B2		

WIRED COMPONENTS

1400	F1	9473	E4
1401	B3	9475	D3
1402	C4	9476	F6
1403	C1	9477	D5
1404	A1	9479	C8
1405	G7	9480	F3
1406	G7	9481	D7
1407	B7	9482	D7
1415	C8	9485	D3
1417	A7	C401	G8
1418	E1		
1419	E4		
1423	F6		
1425	F3		
1429	E6		
1431	E7		
1432	E1		
1433	E7		
1434	C1		
1435	F7		
1437	F7		
2402	A7		
2403	A1		
2417	C3		
2425	E3		
2426	C7		
2428	B5		
2437	C6		
2451	C7		
2470	E6		
2472	E1		
2473	D7		
2479	E8		
3442	C8		
3549	B1		
3550	B1		
3560	E5		
3566	F1		
3567	E7		
3568	D3		
3578	E2		
3588	D2		
3593	F6		
5400	B1		
5401	A6		
5402	A2		
5403	B3		
5404	B3		
5405	B7		
5406	B6		
6400	A1		
6401	A7		
6406	E3		
6408	E4		
6409	E4		
6450	E1		
7402	A2		
7405	B7		
7410	C6		
9401	B6		
9402	B6		
9403	B6		
9404	C6		
9405	C6		
9406	C6		
9407	C5		
9408	C5		
9409	C5		
9410	C5		
9411	C5		
9412	C4		
9413	C4		
9414	C4		
9415	C4		
9416	C4		
9417	D4		
9419	D3		
9420	D3		
9421	D3		
9422	D3		
9423	D2		
9424	D2		
9425	D2		
9426	D2		
9427	A2		
9428	B2		
9429	B2		
9430	B2		
9431	B2		
9432	B2		
9433	B2		
9434	C2		
9435	C2		
9437	A1		
9438	A1		
9439	A1		
9440	B1		
9441	B2		
9442	C2		
9443	C1		
9444	C1		
9445	C1		
9446	D1		
9447	D2		
9448	D2		
9449	D2		
9450	E2		
9451	E2		
9452	F4		
9453	F4		
9456	D4		
9457	E4		
9458	G6		
9459	E2		
9460	D6		
9461	D6		
9462	D5		
9463	E5		
9464	E5		
9465	F2		
9466	E2		
9468	E5		
9469	E5		
9470	F5		
9472	G7		

7-4

CDC KEY BOARD top / copper side view

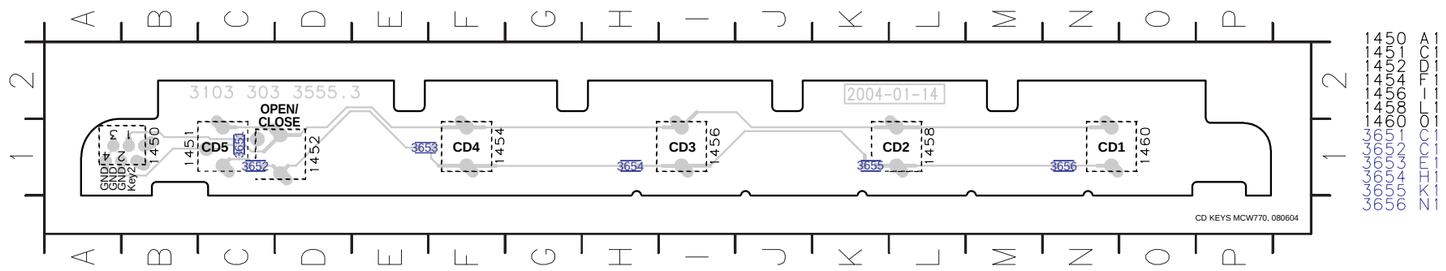

LIGHTBAR top left / copper side view

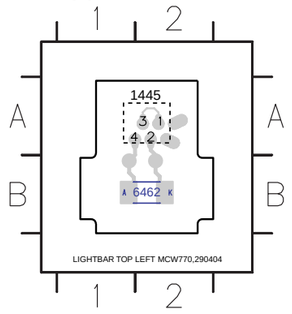

LIGHTBAR top right / copper side view

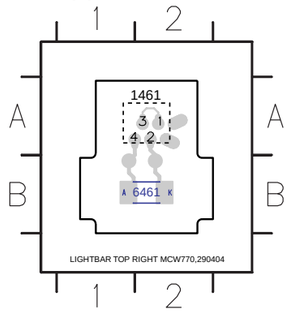

COMMUNICATION LIGHT WIRELESS

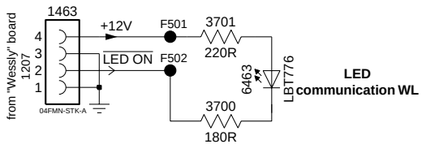

COMMUNICATION LIGHT WL / copper side view

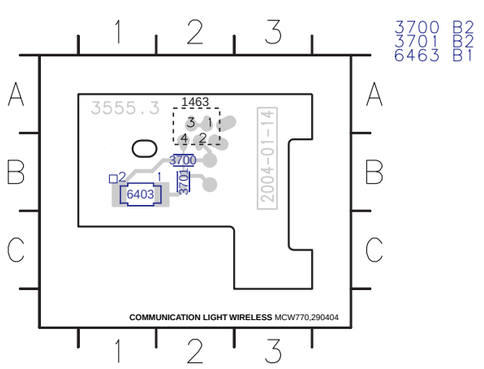

LIGHT BAR WIRELESS

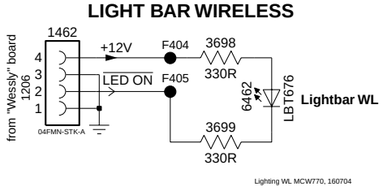

LIGHTBAR WL / copper side view

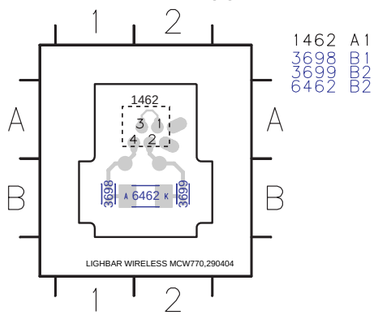

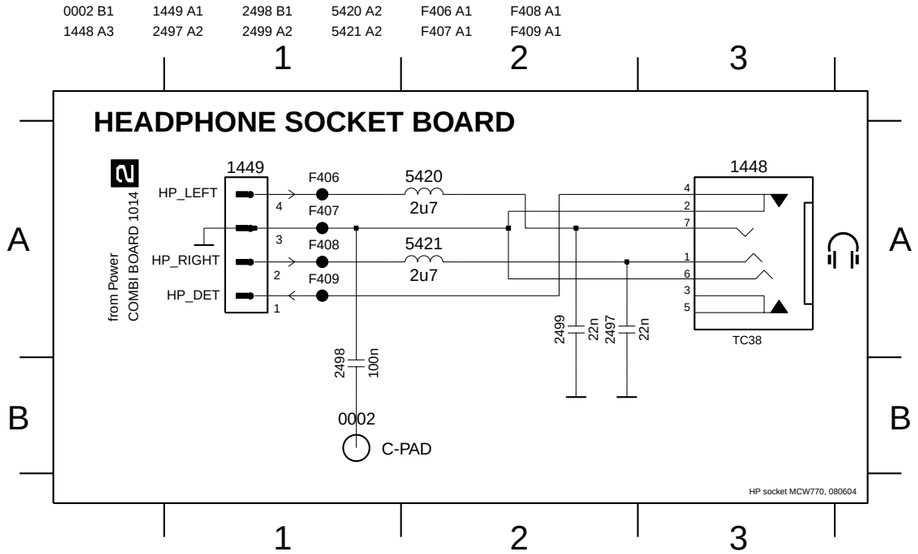

HEADPHONE BOARD

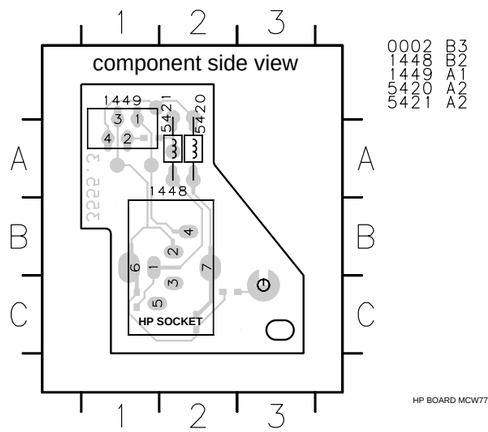

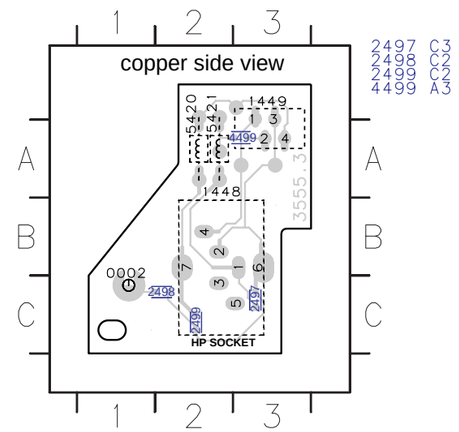

HP BOARD MCW770,080604

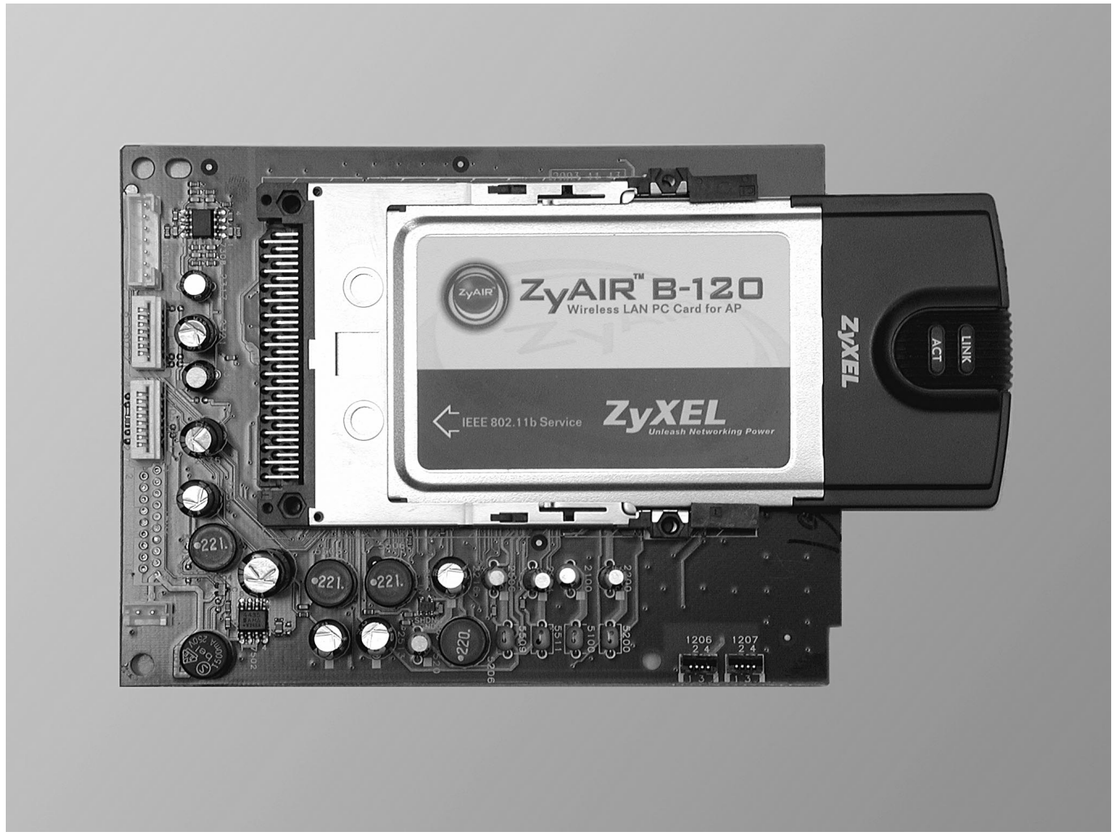

Wessli Module

This module is not intended to be repaired on component level.
Circuit Diagrams and Assembly Drawings are published for orientation only.

In case of defects please replace
the entire Printed Board respectively the Wireless LAN Card.

Parts can be ordered as follows:

3103 308 67861.....Printed Board Assembly Wessli (all versions)
2822 062 41028.....Wireless LAN Card WMOD WIFIB PCC2 B-120 US B (for /21/37)
2822 062 41031.....Wireless LAN Card WMOD WIFIB PCC2 B-120 EU B (for /22)

8-1

Wessli Module – Firmware Upgrade

The firmware of the Wessli Module can be upgraded via wireless network. The network is used to transfer the new firmware from the PC to the on-board Flash-ROM (IC 7103). Firmware and related tools are usually distributed as zip-archive.

To upgrade the firmware of the Wessli Module proceed as follows:

1. Insert the MCW770 Setup-CD into the CD-drive of the PC and walk through the consumer installation.

2. Create a new folder “WiFiUpgrade” on the PC hard disk and extract the content of the supplied zip-archive to this location. The folder should contain the following files:

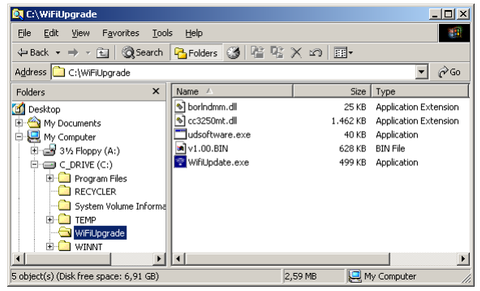

3. Open the Wireless LAN Utility via WiFi icon in the system tray (right-click the icon and click on “View Available Network”).

4. Apply the following settings in the configuration tab:

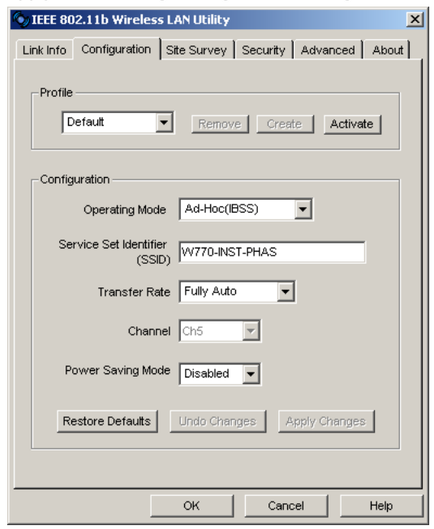

5. Disable encryption in the security tab:

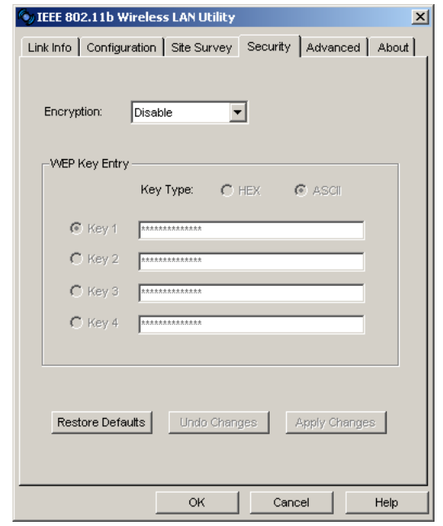

6. Open the “TCP/IP properties” in “Windows Network and Dial-up Connections” and ensure that “Obtain an IP address automatically” is selected.

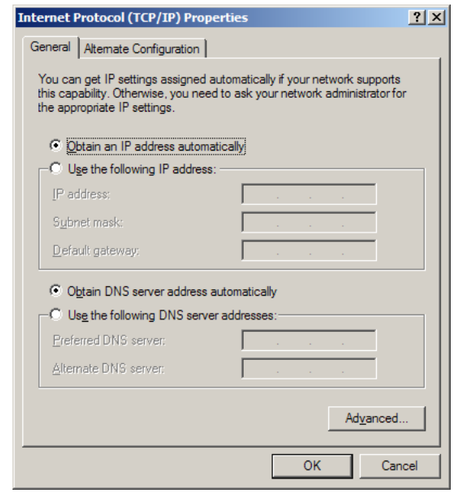

7. Put the MCW770 into Installation mode as follows:
   - Hold the PC-LINK button depressed for at least 5s.
   - The display shows “INSTALLING”.
   - Wait for another 15s.
   - Hold the BROWSE button depressed for at least 2s.
   - Wait for another 15s.
   - The display shows “EXPERT INSTALL” and the color of the WiFi icon in the system tray turns to green.
   - Wait for another 90s to ensure that the set has optained its IP address.

8. Run “WiFiUpdate.exe“ from the folder created in step 2 and mark the firmware upgrade file inside this folder.

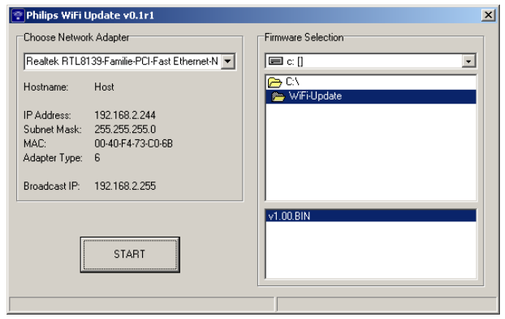

9. Finally, start the firmware upgrade as follows:
   - Click the START button in the WiFi Upgrade utility.
   - Dialog “Press OK to start Upgrade” pops up.

   - Click the OK button.
   - A command window opens and shows:

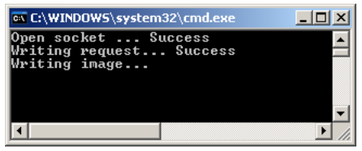

   - The display on the set shows “PRESS PLAY TO UPGRADE PROG”.
   - Press the PLAY button on the set.
   - After a few seconds the upgrade utility reports “Upgrade successful” and the display on the set shows “COMPLETED”.
   - Disconnect the set from the mains supply

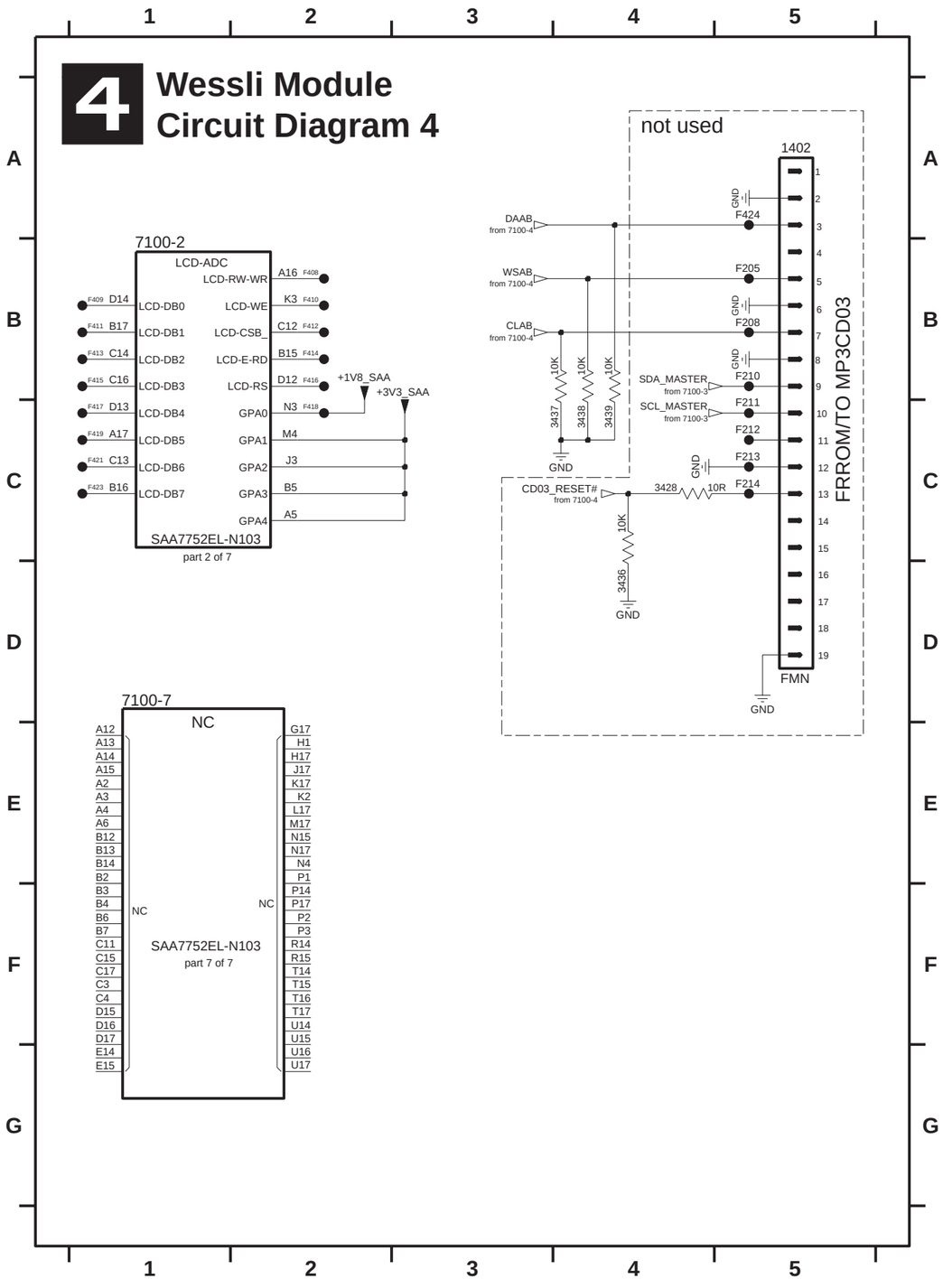

8-3

1 Wessli Module Circuit Diagram 1

7104 — M48LC4M16A2TG-75 8MByte (64Mbit) 9322 167 58668

not used

+3V3_RAM

VDD 1, 14, 27, 3, 9, 43, 49 — VDDQ

A(0) 23, A(1) 24, A(2) 25, A(3) 26, A(4) 29, A(5) 30, A(6) 31, A(7) 32, A(8) 33, A(9) 34, A(10) 22, A(11) 35

A 0 1 2 3 4 5 6 7 8 9 10 11 — 1M-1

A(12) 20, A(13) 21 — BA 0 1

CLK 38, CKE 37, CS# 19, RAS# 18, CAS# 17, WE# 16

Φ DRAM 1M X 16 X 4

D

DQM H L — DQMH 39, DQML 15

VSS 28, 41, 54 — VSSQ 6, 12, 46, 52

GND

7101 — K4S161622H-TC60 2MByte (16Mbit) 9322 205 81668

+3V3_RAM

VDD 1, 25 — VDDQ 7, 13, 38, 44

A(0) 21, A(1) 22, A(2) 23, A(3) 24, A(4) 27, A(5) 28, A(6) 29, A(7) 30, A(8) 31, A(9) 32, A(10) 20

A 0 1 2 3 4 5 6 7 8 9 10 — AP

A(11) 19 — BA

CLK 35, CKE 34, CS# 18, RAS# 17, CAS# 16, WE# 15

Φ SYNC DRAM 2x512Kx16

D

DQM L U — DQML 14, DQMH 36

NC 33, NC|RFU 37

VSS 26, 50 — VSSQ 4, 10, 41, 47

GND

7100-4 CDB-EBI

SBSY to 7100-1	F100	3161 47R	D6	CDB-CFLAG-SBSY	
CLAB to 1402	F102	3162 1K0	C9	CDB-CLAB	
CRQ to 3289	F104	3163 47R	C5	CDB-CRQ-NERDY	
DAAB to 1402	F106	3164 1K0	C7	CDB-DAAB	
GND		3165 47R	D9	CDB-EFAB	
		3166 47R	D7	CDB-SFSY	
		3167 47R	D8	CDB-V4-SUB	
WSAB to 1402	F114	3168 1K0	C8	CDB-WSAB	

CDB-RCK C6 F101 — not used 3185 47R

CDB-NCRST-NHRDY D5 — CD03_RESET# to 1402

CD-CLOCK K1 F105 — F107 WE#, F109 CS#

not used: GND 2112 10p, GND 2111 10p

(WE#) EBI-WEN J2 3106 68R

(CS#) EBI-SDNCS0 H3 3108 68R

(CLK) EBI-SDCLKOUT J1 3110 100R — 5104 EMI 220R — F111 CLK

(OE#) EBI-NOE H2 3112 68R — OE#

(RAS#) EBI-NRAS R10 3114 68R — RAS#

(CAS#) EBI-NCAS R11 3116 68R — CAS#

(DQML) EBI-DQM0 U11 3119 68R — DQML

(DQMH) EBI-DQM1 T11 3122 68R — DQMH

(CKE) EBI-CKE0 H4 3125 68R — CKE

(CE#) EBI-NCS0 U10 3128 68R — CE#

EBI-NCS1 T10 3131 68R — NCS1

EBI-NCS2 G16 3134 68R — NCS2

D(0:15) — D(0) 3115 47R R4 EBI-D0; D(1) 3117 47R T1 EBI-D1; D(2) 3118 47R P5 EBI-D2; D(3) 3120 47R T2 EBI-D3; D(4) 3121 47R R5 EBI-D4; D(5) 3123 47R U1 EBI-D5; D(6) 3124 47R P6 EBI-D6; D(7) 3126 47R U2 EBI-D7; D(8) 3127 47R P7 EBI-D8; D(9) 3129 47R T3 EBI-D9; D(10) 3130 47R U3 EBI-D10; D(11) 3132 47R T4 EBI-D11; D(12) 3133 47R U4 EBI-D12; D(13) 3136 47R T5 EBI-D13; D(14) 3137 47R U5 EBI-D14; D(15) 3139 47R T6 EBI-D15

EBI-A0 U6 3138 68R — A(0); R6 3140 68R A(1); P8 3141 68R A(2); T7 3142 68R A(3); P9 3143 68R A(4); U7 3144 68R A(5); P10 3145 68R A(6); R7 3146 68R A(7); P11 3147 68R A(8); U8 3148 68R A(9); T8 3149 68R A(10); R8 3150 68R A(11); U9 3151 68R A(12); T9 3152 68R A(13); R9 3153 68R A(14); J14 3154 68R A(15); H14 3155 68R A(16); G14 3156 68R A(17); F14 3157 68R A(18); H16 3158 68R A(19); J16 3159 68R A(20)

SAA7752EL-N103 part 4 of 7

A(0:20) — CTRL

close to SDRAM

D_RAM(0:15) — D_RAM(0) 3169 47R D(0); D_RAM(1) 3170 47R D(1); D_RAM(2) 3171 47R D(2); D_RAM(3) 3172 47R D(3); D_RAM(4) 3173 47R D(4); D_RAM(5) 3174 47R D(5); D_RAM(6) 3175 47R D(6); D_RAM(7) 3176 47R D(7); D_RAM(8) 3177 47R D(8); D_RAM(9) 3178 47R D(9); D_RAM(10) 3179 47R D(10); D_RAM(11) 3180 47R D(11); D_RAM(12) 3181 47R D(12); D_RAM(13) 3182 47R D(13); D_RAM(14) 3183 47R D(14); D_RAM(15) 3184 47R D(15) — D(0:15)

close to Flash / close to Osz / close to SDRAM

+3V3 — 5100 10u — 5102 600R / 0805 — +3V3_ROM

+3V3_OSZ — 5103 600R / 0603

5101 600R / 0805

2100 47u 6.3V; 2101 100n; 2102 100n; 2103 100n; 2104 100n; 2105 100n; 2106 100n; 2107 100n; 2108 100n; 2113 100n; 2114 100n — GND — not used

7103 — M29W160EB-70N6 2MByte (16MBit) 9322 197 26668

0606 FIRMWARE

+3V3_ROM — 37

A(1) 25, A(2) 24, A(3) 23, A(4) 22, A(5) 21, A(6) 20, A(7) 19, A(8) 18, A(9) 8, A(10) 7, A(11) 6, A(12) 5, A(13) 4, A(14) 3, A(15) 2, A(16) 1, A(17) 48, A(18) 17, A(19) 16, A(20) 9

A 0 1 2 3 4 5 6 7 8 9 10 11 12 13 14 15 16 17 18 19 — 2M-1 / 1M-1

ROM (2Mx8) (1Mx16) [FLASH]

D(0) 29, D(1) 31, D(2) 33, D(3) 35, D(4) 38, D(5) 40, D(6) 42, D(7) 44, D(8) 30, D(9) 32, D(10) 34, D(11) 36, D(12) 39, D(13) 41, D(14) 43, D(15) 45

A-1 — BY, RY — F124 — 3160 10K — +3V3_ROM

NC 10, 13, 14

CE 26, OE 28, BYTE 47, WE 11, RES 12

CE# OE# CAS# WE# RESET# — word mode (16bit) — +3V3_ROM — 2110 1n0 — GND

46, 27 — GND

A(0:20) — CTRL — D(0:15)

0606 B11
2100 B9
2101 B9
2102 B10
2103 B10
2104 B10
2105 B10
2106 B11
2107 B11
2108 A11
2110 E9
2111 B8
2112 B8
2113 B11
2114 B11
3106 B7
3108 B7
3110 B7
3112 B7
3114 B7
3115 C5
3116 C7
3117 C4
3118 C5
3119 C7
3120 C4
3121 C5
3122 C7
3123 C4
3124 C5
3125 C7
3126 C4
3127 C5
3128 C7
3129 C4
3130 C5
3131 C7
3132 C4
3133 D5
3134 D7
3136 D4
3137 D5
3138 D7
3139 D4
3140 D7
3141 D7
3142 D7
3143 D7
3144 D7
3145 D7
3146 D7
3147 D7
3148 D7
3149 E7
3150 E7
3151 E7
3152 E7
3153 E7
3154 E7
3155 E7
3156 E7
3157 E7
3158 E7
3159 E7
3160 E11
3161 A5
3162 A5
3163 B5
3164 B5
3165 B5
3166 B5
3167 B5
3168 B5
3169 E4
3170 E5
3171 E4
3172 E5
3173 E4
3174 E5
3175 E4
3176 E5
3177 F4
3178 F5
3179 F4
3180 F5
3181 F4
3182 F5
3183 F4
3184 F5
3185 A7
5100 A8
5101 A9
5102 A9
5103 A9
5104 B8
7100-4 A5
7101 E1
7103 C10
7104 B1
F100 A4
F101 A7
F102 A4
F104 B4
F105 B7
F106 B4
F107 A8
F109 B8
F111 B8
F113 B7
F114 B7
F115 B7
F116 C7
F117 C7
F118 C7
F119 C7
F120 C7
F122 C7
F123 D7
F124 E11

8-4

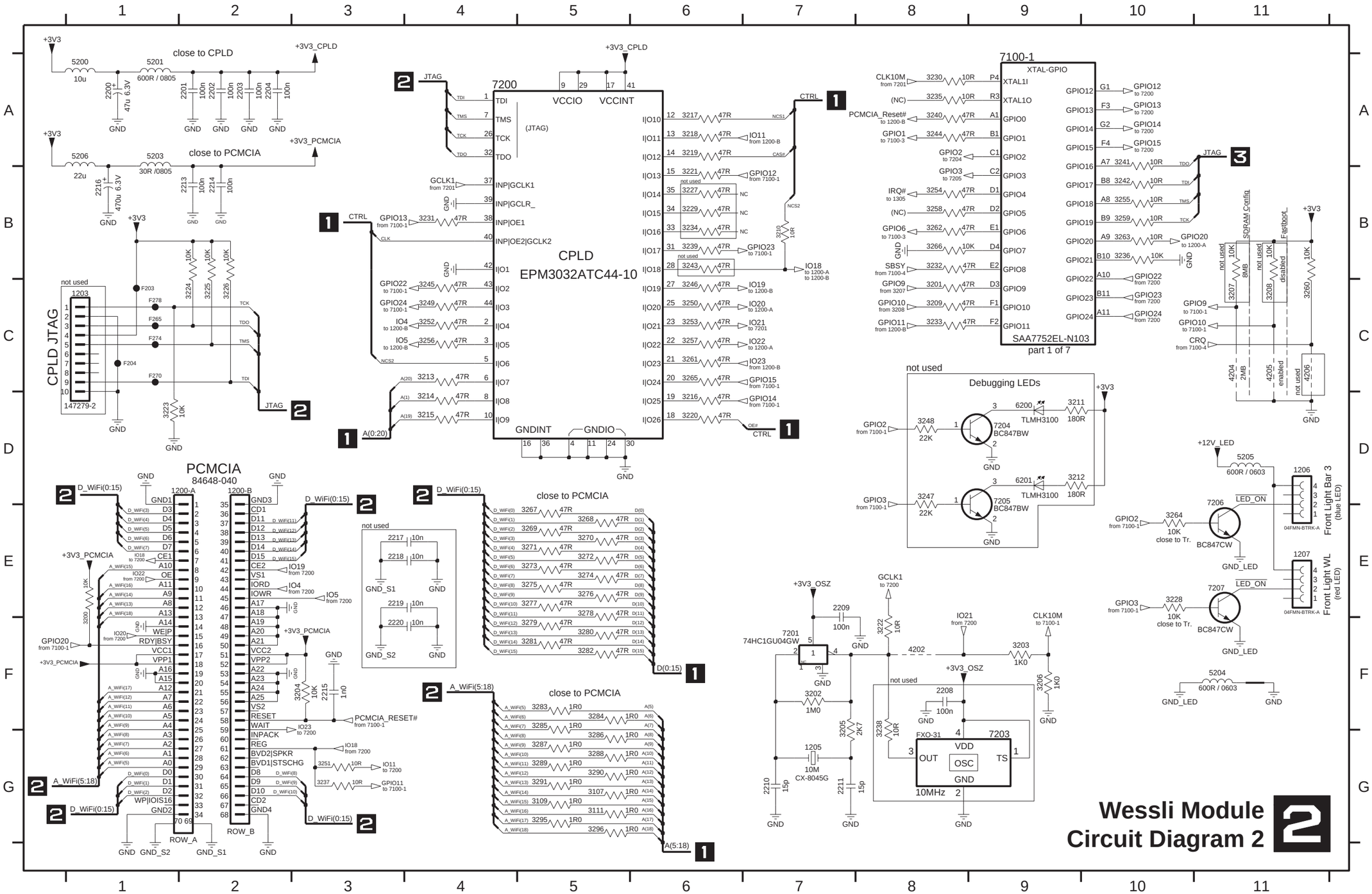

1200-A D2
1200-B D2
1203 C1
1205 G7
1206 D11
1207 E11
2200 A1
2201 A2
2202 A2
2203 A2
2204 A2
2208 F8
2209 E7
2210 G7
2211 G7
2213 B2
2214 B2
2215 F3
2216 B1
2217 E3
2218 E3
2219 E3
2220 F3
3107 G5
3109 G5
3111 G5
3200 F1
3201 C8
3202 F7
3203 F9
3204 F3
3205 F7
3206 F9
3207 C11
3208 C11
3209 C8
3210 B7
3211 D9
3212 D9
3213 C4
3214 D4
3215 D4
3216 D6
3217 A6
3218 A6
3219 A6
3220 D6
3221 B6
3222 F8
3223 D1
3224 C2
3225 C2
3226 C2
3227 B6
3228 E10
3229 B6
3230 A8
3231 B4
3232 B8
3233 C8
3234 B6
3235 A8
3236 B10
3237 G3
3238 F8
3239 B6
3240 A8
3241 A10
3242 B10
3243 B6
3244 A8
3245 C4
3246 C6
3247 D8
3248 D8
3249 C4
3250 C6
3251 G3
3252 C4
3253 C6
3254 B8
3255 B10
3256 C4
3257 C6
3258 B8
3259 B10
3260 C11
3261 C6
3262 B8
3263 B10
3264 E10
3265 C6
3266 B8
3267 E5
3268 E5
3269 E5
3270 E5
3271 E5
3272 E5
3273 E5
3274 E5
3275 E5
3276 E5
3277 E5
3278 E5
3279 F5
3280 F5
3281 F5
3282 F5
3283 F5
3284 F5
3285 F5
3286 G5
3287 G5
3288 G5
3289 G5
3290 G5
3291 G5
3295 G5
3296 G5
4202 F8
4204 C11
4205 C11
4206 C11
5200 A1
5201 A1
5203 A1
5204 F11
5205 D11
5206 A1
6200 D9
6201 D9
7100-1 A9
7200 A4
7201 F7
7203 G9
7204 D9
7205 D9
7206 E11
7207 E11
F203 C1
F204 C1
F265 C1
F270 C1
F274 C1
F278 C1

8-5

Wessli Module Circuit Diagram 3

1304 A1
1305 A11
1306 B1
1307 C11
2304 B11
2305 E5
2306 G5
2307 A7
2308 E2
2309 A3
2310 B7
2312 E9
2313 E7
2314 E7
2315 F11
2316 F8
2317 G9
2318 G7
2319 G7
2320 G8
2321 D10
2324 G4
2325 G4
2326 E9
2327 G9
2328 F10
2329 F10
3301 B11
3302 B11
3303 E6
3304 G6
3305 A9
3306 A11
3307 D10
3317 A1
3318 C7
3319 C7
3320 F1
3321 F2
3322 G1
3323 G1
3324 G2
3333 A8
3334 A5
3335 A8
3336 A7
3337 A7
3338 A9
3349 B8
3350 B11
3352 B4
3353 B4
3354 B4
3355 B8
3357 C6
3358 D6
3359 C6
3360 B2
3361 B2
3362 B2
3363 C6
3364 B1
3365 D4
3367 B1
3368 C1
3369 C2
3374 C1
3376 D11
3377 E7
3379 E10
3385 E7
3386 E9
3388 D1
3389 F7
3390 F8
3391 D1
3394 G7
3395 G10
3396 G7
3397 G9
3398 G7
3399 G8
4300 A5
4301 A5
4302 A8
4303 B8
4304 C11
4305 C11
4306 D11
4308 C11
4309 F1
4311 E7
4312 F7
4314 D11
4315 A10
4316 B11
4317 B11
4318 F10
4319 F10
5300 D9
5301 D10
5304 A1
5305 F4
5306 G4

5307 A11
6300 A5
6301 E11
7100-3 B5
7100-5 F3
7304 A8
7305 A4
7307 B8
7308-1 E8
7308-2 G8
7309-1 E6
7309-2 F6
7310 A10
F310 F2
F311 A11
F312 A2
F313 B11
F314 B11
F316 B11
F317 B11
F318 A1
F319 B11
F322 C6
F324 C6
F326 C6
F327 B2
F328 C6
F329 C2
F330 C6
F331 B2
F332 C6
F333 F4
F334 C2
F335 D6
F337 D6
F338 F4
F339 G2
F340 G4
F344 D11
F345 D11
F346 E9
F347 D11
F348 D11
F351 F9
F354 A1
F355 A1
F356 B1
F357 B1
F358 D2
F359 D2

8-6

Wessli Module
Circuit Diagram 5

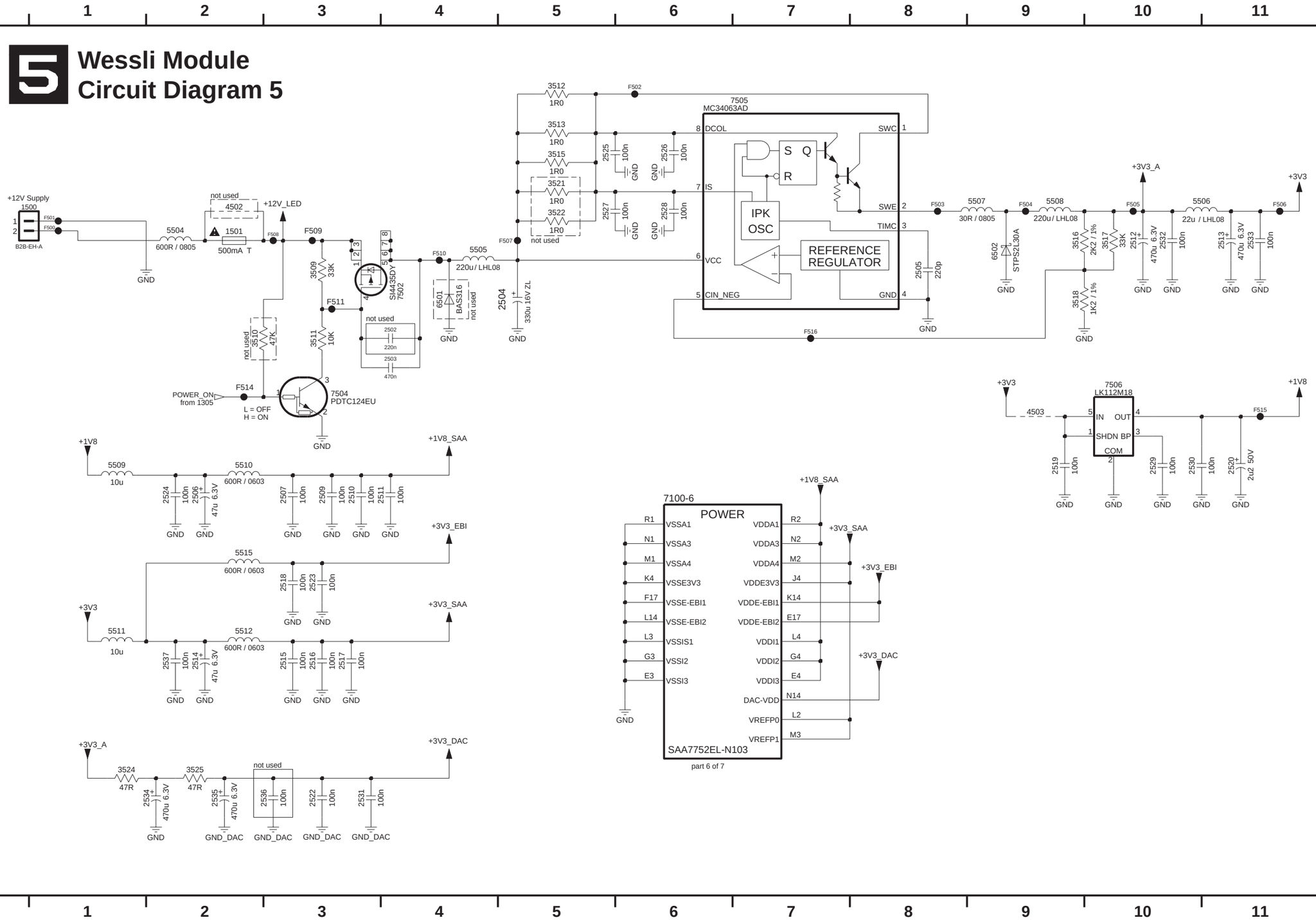

1500 B1
1501 B2
2502 C4
2503 C4
2504 C5
2505 B8
2506 D2
2507 D3
2509 D3
2510 D3
2511 D4
2512 B10
2513 B11
2514 F2
2515 F3
2516 F3
2517 F3
2518 E3
2519 D9
2520 D11
2522 G3
2523 E3
2524 D2
2525 A5
2526 A6
2527 B5
2528 B6
2529 D10
2530 D10
2531 G3
2532 B10
2533 B11
2534 G2
2535 G2
2536 G3
2537 F2
3509 B3
3510 C2
3511 C3
3512 A5
3513 A5
3515 A5
3516 B9
3517 B10
3518 C9
3521 B5
3522 B5
3524 G1
3525 G2
4502 B2
4503 D9
5504 B2
5505 B4
5506 B10
5507 B9
5508 B9
5509 D1
5510 D2
5511 E1
5512 E2
5515 E2
6501 C4
6502 B9
7100-6 D6
7502 C4
7504 C3
7505 A7
7506 C10
F500 B1
F501 B1
F502 A6
F503 B8
F504 B9
F505 B10
F506 B11
F507 B5
F508 B3
F509 B3
F510 B4
F511 C3
F514 C2
F515 D11
F516 C7

Wessli Board – Componentside View

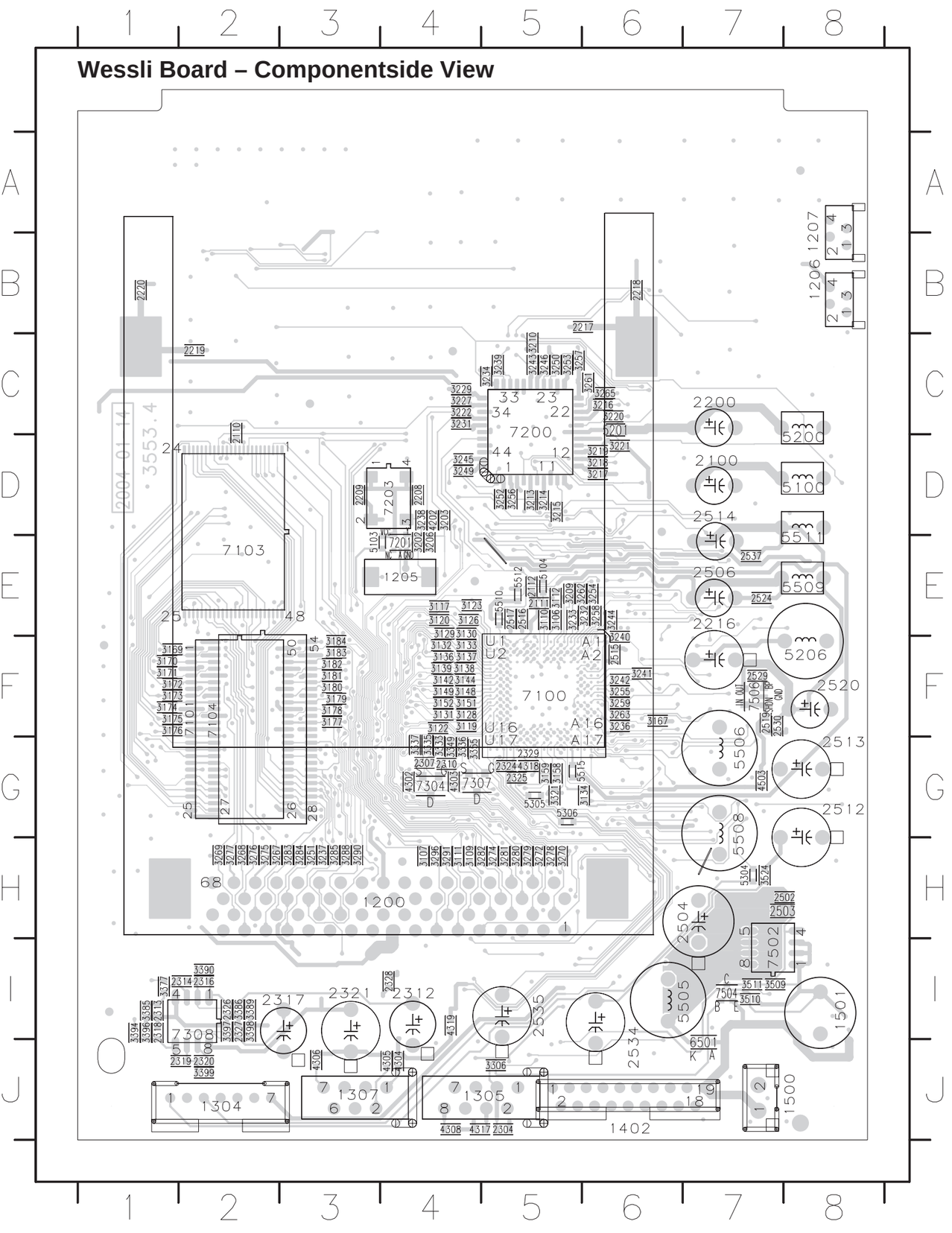

1200	H4	3136	F4	3268	H2	7203	D4
1205	E4	3137	F4	3269	H2	7304	G4
1206	B8	3138	F4	3270	H5	7307	G4
1207	A8	3139	F4	3272	H5	7308	I2
1304	J2	3142	F4	3274	H5	7502	I7
1305	J5	3144	F4	3275	H2	7504	I7
1307	J3	3148	F4	3276	H2	7506	F7
1402	J6	3149	F4	3277	H2		
1500	J8	3151	F4	3278	H5		
1501	I8	3152	F4	3279	H5		
2100	D7	3158	G5	3280	H5		
2110	C2	3159	G5	3281	H5		
2111	E5	3167	F6	3282	H4		
2112	E5	3169	F1	3283	H3		
2200	C7	3170	F1	3284	H3		
2208	D4	3171	F1	3285	H3		
2209	D3	3172	F1	3288	H3		
2216	E7	3173	F1	3290	H3		
2217	B6	3174	F1	3291	H4		
2218	B6	3175	F1	3296	H4		
2219	C2	3176	F1	3306	J5		
2220	B1	3177	F3	3321	G5		
2304	J5	3178	F3	3333	G4		
2307	G4	3179	F3	3335	G4		
2310	G4	3180	F3	3336	G4		
2312	I4	3181	F3	3337	G4		
2313	I1	3182	F3	3349	G4		
2314	I2	3183	F3	3355	G4		
2316	I2	3184	F3	3377	I1		
2317	I3	3202	E4	3385	I1		
2318	I1	3203	D4	3386	I2		
2319	J2	3206	E4	3389	I2		
2320	J2	3209	E5	3390	I2		
2321	I3	3210	C5	3394	I1		
2324	G5	3213	D5	3396	I1		
2325	G5	3214	D5	3397	I2		
2326	I2	3215	D5	3398	I2		
2327	I2	3216	C6	3399	J2		
2328	I4	3217	D6	3509	I7		
2329	G5	3218	D6	3510	I7		
2502	H8	3219	D6	3511	I7		
2503	H7	3220	C6	3524	H7		
2504	H6	3221	D6	4202	D4		
2506	E7	3222	C4	4302	G4		
2512	G8	3227	C4	4303	G4		
2513	G8	3229	C4	4304	J4		
2514	D7	3231	C4	4305	J4		
2515	F6	3232	E6	4306	J3		
2516	E5	3233	E5	4308	J4		
2517	E5	3234	C5	4317	J4		
2519	F7	3236	F6	4318	G5		
2520	F8	3237	H3	4319	I4		
2524	E7	3238	D4	4503	G7		
2529	F7	3239	C5	5100	D8		
2530	F7	3240	F6	5103	E3		
2534	J6	3241	F6	5104	E5		
2535	I5	3242	F6	5200	D8		
2537	E7	3243	C5	5201	C6		
3106	E5	3244	E6	5206	F8		
3107	H4	3245	D4	5304	H7		
3109	H4	3246	C5	5305	G5		
3110	E5	3249	D4	5306	G5		
3111	H4	3250	C5	5505	I7		
3112	E5	3251	H3	5506	G7		
3117	E4	3252	D5	5508	G7		
3119	F4	3253	C5	5509	E8		
3120	E4	3254	E6	5510	E5		
3122	F4	3255	F6	5511	E8		
3123	E4	3256	D5	5512	E5		
3126	E4	3257	C5	5515	G5		
3128	F4	3258	E6	6501	J7		
3129	E4	3259	F6	7100	F5		
3130	E4	3261	C6	7101	F2		
3131	F4	3262	E5	7103	E2		
3132	F4	3263	F6	7104	F2		
3133	F4	3265	C6	7200	C5		
3134	G6	3267	H2	7201	E4		

Wessli Board – Copperside View

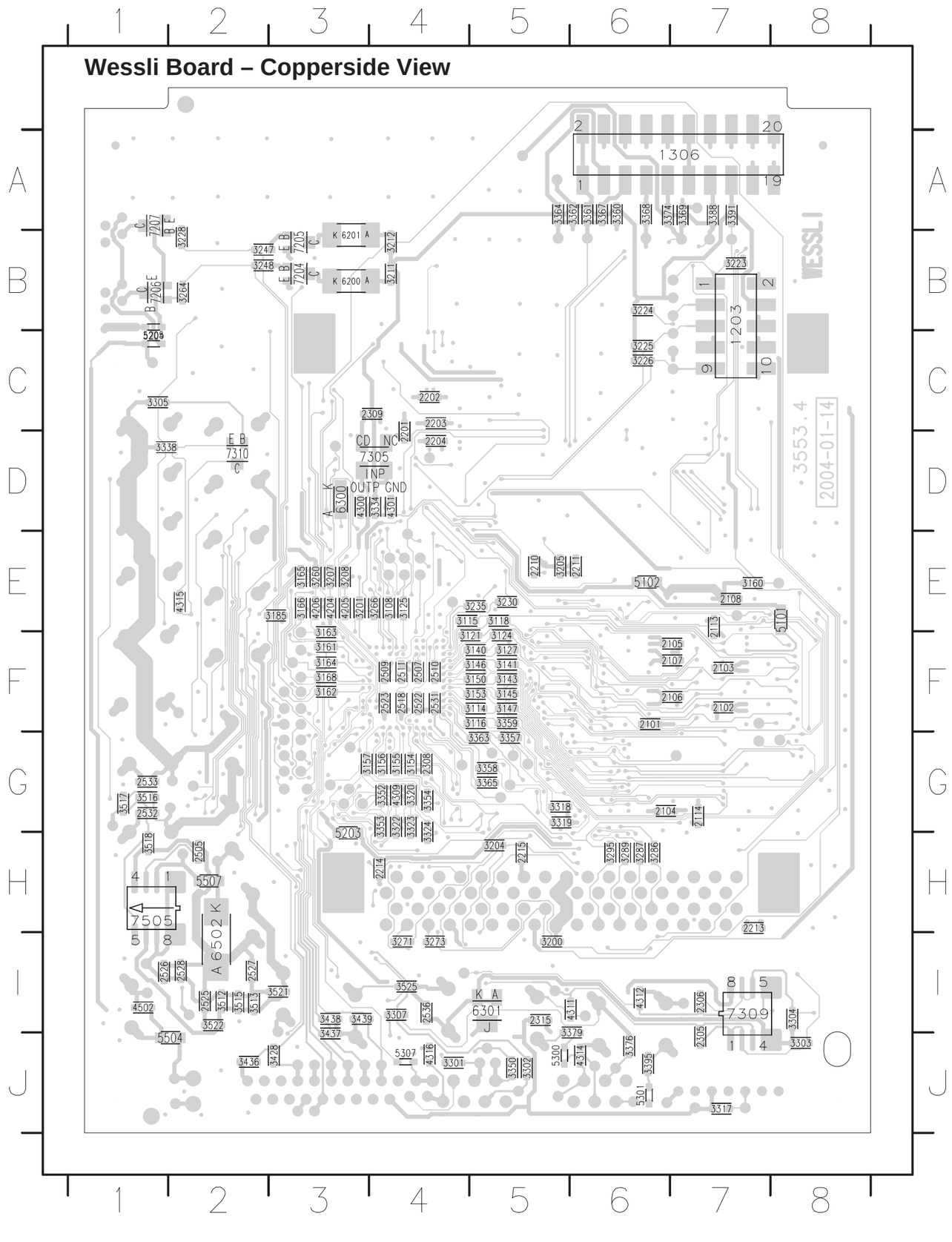

1203	B7	3208	E3	4309	G4
1306	A7	3211	B4	4311	I6
2101	F6	3212	B4	4312	I6
2102	F7	3223	B7	4314	J6
2103	F7	3224	B6	4315	E2
2104	G6	3225	C6	4316	J4
2105	F7	3226	C6	4502	I1
2106	F7	3228	B2	5101	E8
2107	F7	3230	E5	5102	E6
2108	E7	3235	E5	5203	H3
2113	E7	3247	B2	5204	C1
2114	G7	3248	B2	5205	C1
2201	D4	3260	E3	5300	J5
2202	C4	3264	B2	5301	J6
2203	C4	3266	E4	5307	J4
2204	D4	3271	I4	5504	J2
2210	E5	3273	I4	5507	H2
2211	E6	3286	H6	6200	B3
2213	H7	3287	H6	6201	B3
2214	H4	3289	H6	6300	D3
2215	H5	3295	H6	6301	I5
2305	J7	3301	J4	6502	I2
2306	I7	3302	J5	7204	B3
2308	G4	3303	J8	7205	B3
2309	C4	3304	I8	7206	B1
2315	I5	3305	C1	7207	A1
2505	H2	3307	I4	7305	D4
2507	F4	3317	J7	7309	I7
2509	F4	3318	G5	7310	D2
2510	F4	3319	G5	7505	H1
2511	F4	3320	G4		
2518	F4	3322	G4		
2522	F4	3323	G4		
2523	F4	3324	G4		
2525	I2	3334	D4		
2526	I1	3338	D1		
2527	I2	3350	J5		
2528	I2	3352	G4		
2531	F4	3353	G4		
2532	G1	3354	G4		
2533	G1	3357	G5		
2536	I4	3358	G5		
3108	E4	3359	F5		
3114	F5	3360	A6		
3115	E4	3361	A6		
3116	F5	3362	A6		
3118	F5	3363	G5		
3121	F5	3364	A5		
3124	F5	3365	G5		
3125	E4	3367	A6		
3127	F5	3368	A6		
3140	F5	3369	A7		
3141	F5	3374	A6		
3143	F5	3376	J6		
3145	F5	3379	I6		
3146	F5	3388	A7		
3147	F5	3391	A7		
3150	F5	3395	J6		
3153	F5	3428	J3		
3154	G4	3436	J2		
3155	G4	3437	J3		
3156	G4	3438	I3		
3157	G3	3439	I3		
3160	E7	3512	I2		
3161	F3	3513	I2		
3162	F3	3515	I2		
3163	F3	3516	G1		
3164	E3	3517	G1		
3165	E3	3518	H1		
3166	E3	3521	I3		
3168	F3	3522	I2		
3185	E3	3525	I4		
3200	I5	4204	E3		
3201	E3	4205	E3		
3204	H5	4206	E3		
3205	E5	4300	D3		
3207	E3	4301	D4		

9-1

TUNER BOARD ECO6 / SYSTEMS-CENELEC

VERSION PROGRAMMING COMPONENTS

VERSION	6120	3156	3157	3170	7111
/00 /02 FM/MW/LW	☒				
/00 /02 FM/MW		☒	☒		☒
/01 FM/MW		☒	☒		☒
/14 FM-OIRT/MW		☒		☒	
/17 FM/AM	☒				☒

☒ component mounted

VERSION DETECTION

P1 — 6120 BAS216 — 3156 100K — 0.2V — 0V — 7111 BC847C — 3170 10K — 3157 10K — P0

PROGRAMMABLE OUTPUT PORTS

LEGEND

* ... only assembled in FM/AM-version
ⓟ ...for provision only
USA ... for USA version only
LW ... for LW version only

SMD jumper 41xx 0R

EVM: ...V FM mode stereo; ...V MW mode; ...V LW mode
voltages measured while set is tuned to a strong transmitter

Signal path: FM; AM; MPX (Audio Frequency); AF - left/right

ECO6 Sys-Cenelec, 010517

1101	A2	5121	E11
1102	B1	5122	H5
1103	E2	5123	G5
1110	B2	6105-1	E4
1120	E14	6105-2	G6
1130	A2	6106	D4
1131	C2	6107	G13
1132	F13	6120	C13
2102	B1	7101	C8
2105	A2	7103	H8
2106	E3	7104	D2
2107	E4	7105	F4
2108	G3	7109	H3
2109	G3	7110	H12
2118	H6	7111	C13
2119	H6	7112	G12
2120	H6	7122	H4
2122	I6	7124	H7
2123	H6	7141	B2
2124	H6	7103	B4
2125	H6	7104	B6
2127	E7	7105	E2
2128	B8	7106	E2
2129	C7	7107	C3
2130	F11	7109	D5
2131	F8	7110	D5
2132	F8	7111	E5
2133	F8	7112	F7
2134	I8	7113	A9
2135	I9	7114	B11
2136	H14	7116	F10
2137	H13	7117	F13
2138	F9	7118	G11
2139	G9	7120	F13
2140	G9	7121	F13
2141	F10	7122	E13
2143	G12	7123	E13
2144	G11	7124	G14
2145	E11	7125	F14
2146	E12	7126	F13
2147	E12	7127	F13
2148	E12	7140	F11
2149	H7	7141	F10
2150	A10	7142	F10
2159	D5		
2161	C11		
2162	H12		
2163	D11		
2164	G10		
2165	C7		
2166	E11		
2167	E11		
2169	G8		
2180	C4		
2190	C3		
2191	C3		
3105	D5		
3108	D2		
3109	G4		
3123	H3		
3125	H2		
3128	H3		
3130	I9		
3131	I9		
3132	G4		
3134	H6		
3135	E7		
3137	H7		
3141	E7		
3142	E6		
3143	G7		
3144	G8		
3145	F8		
3146	G13		
3150	H12		
3151	H12		
3152	G14		
3153	G13		
3154	F13		
3155	G12		
3156	C12		
3157	D12		
3158	E13		
3159	D13		
3160	D13		
3161	D13		
3167	F12		
3168	F11		
3169	E11		
3170	D12		
3171	G12		
3172	G12		
3176	H7		
3180	I3		
3190	B6		
3191	B7		
3192	B6		
3193	B4		
3194	C4		
3195	C3		
4101	E2		
4102	F3		
4104	H5		
5102	E3		
5103	F2		
5109	B9		
5110	B10		
5111	A9		
5112	A11		
5114	B11		
5115	E7		
5118	G9		
5119	G9		

1101 B5 1110 B4 1131 C5 2107 B3 2133 C1 2162 A4 5102 C4 5110 A2 5114 A2 5121 B2 7104 C4 9101 A2 9104 B1 9107 B4 9110 A4
1102 B5 1120 A4 1132 A4 2128 A3 2138 B1 2191 B4 5103 C4 5111 A3 5115 C2 5122 C3 7105 C5 9102 B2 9105 B1 9108 B3 9111 A3
1103 C5 1130 A5 2106 B4 2129 B3 2144 B1 3142 C2 5109 B3 5112 A2 5119 B2 5123 C3 7112 B1 9103 A1 9106 B1 9109 C2

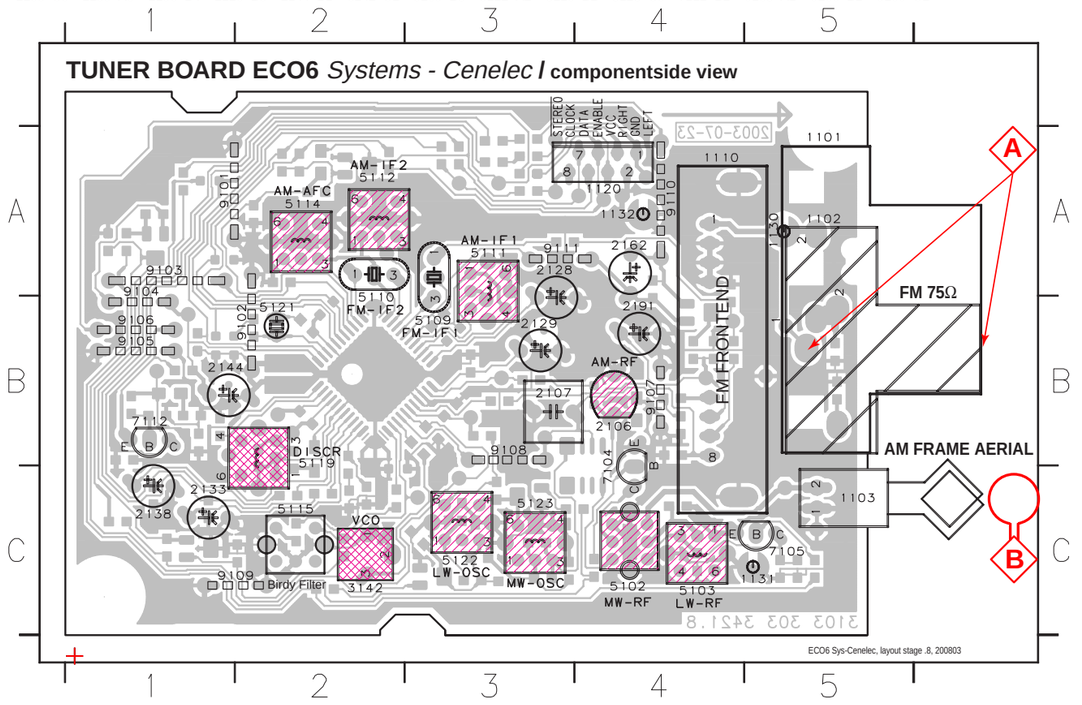

2102 B1 2120 C3 2130 B3 2137 A3 2146 B5 2161 A4 2169 A3 3123 A5 3134 C3 3145 C4 3154 B5 3160 A3 3171 B5 3192 A2 4104 C3 6106 B2 7110 B2
2105 B1 2122 C3 2131 C4 2139 B4 2147 A5 2163 A4 2180 B2 3125 A5 3135 C4 3146 B5 3155 B5 3161 A4 3172 B5 3193 B2 4105 B2 6107 B5 7111 A4
2108 C1 2123 C3 2132 C4 2140 B4 2148 B4 2164 B4 2190 B2 3128 C2 3137 C4 3150 B3 3156 A4 3167 A5 3176 C4 3194 B2 4106 B3 6120 A4 7122 C3
2109 C1 2124 C3 2134 C5 2141 B5 2149 C4 2165 B3 3105 B3 3130 C4 3141 B3 3151 A2 3157 A4 3168 C5 3180 A5 3195 B2 4107 C4 7101 B4 7124 C3
2118 C3 2125 C3 2135 C5 2143 B5 2150 B3 2166 B5 3108 C2 3131 C4 3143 C5 3152 A3 3158 A3 3169 B4 3190 B2 4101 C2 5118 C4 7103 C5
2119 C3 2127 C4 2136 A3 2145 B5 2159 B3 2167 B4 3109 C1 3132 B3 3144 A5 3153 A3 3159 A3 3170 A4 3191 A3 4102 C2 6105 B2 7109 A5

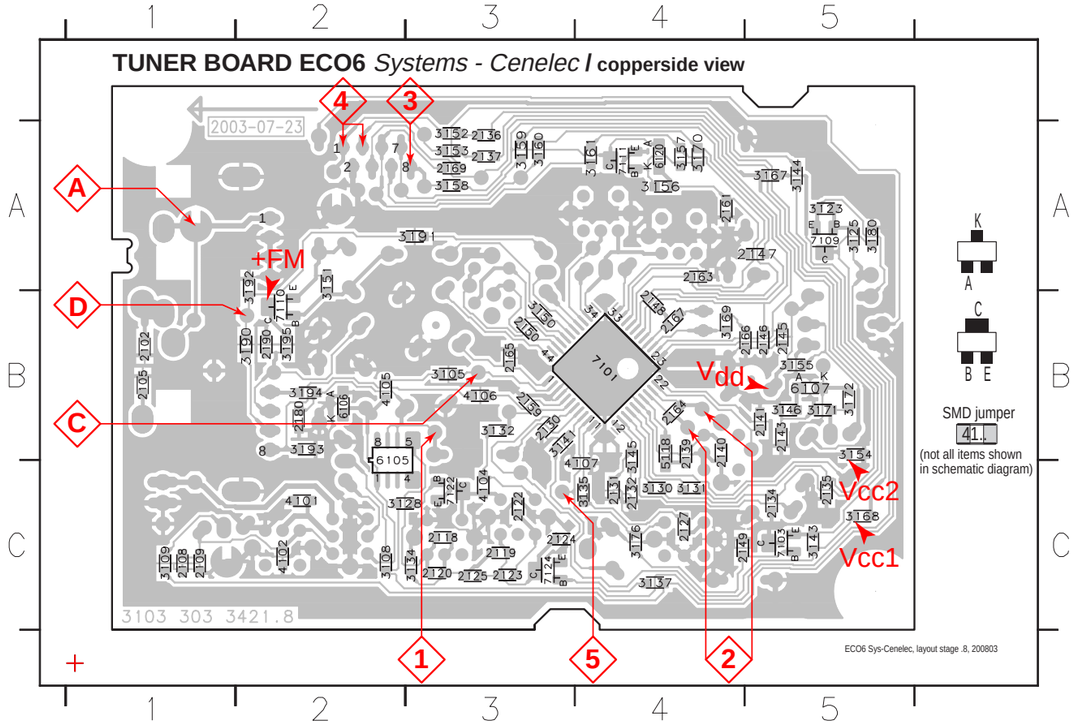

These assembly drawings show a summary of all possible versions.
For components used in a specific version see schematic diagram respectively partslist.

9-2

TUNER ADJUSTMENT TABLE (**ECO6 Cenelec** FM/MW - and FM/MW/LW - versions with AM-frame aerial)

Waverange	Input frequency	Input	Tuned to	Adjust	Output	Scope/Voltmeter
VARICAP ALIGNMENT						
FM 87.5 - 108MHz (50kHz grid)			108MHz	check	◇1	8V ±1.2V
			87.5MHz	check		1.6V ±0.5V
MW 531 - 1602kHz (9kHz grid)			1602kHz	5123		8V ±0.2V 3-band 6.9V ±0.2V 2-band
			531kHz	check		1.1V ±0.4V
LW 153 - 279kHz (3kHz grid)			279kHz	5122		8V ±0.2V
			153kHz	check		1.1V ±0.4V
FM - IF						
FM	10.7MHz, 45mV continuous wave	◇D	IC 7101 pin 21, shortcircuit to block AFC, 2141	5119	◇2	0mV ±3mV
FM - VCO						
FM	98MHz, 1mV continuous wave	◇A	98MHz	3142	◇3	152kHz ±1kHz [1]
FM RF (channel separation)	Note: The FM-frontend unit has already been adjusted by the factory and needs therefore no further adjustments for service purposes.					
FM	98MHz, 1mV 90% Left + 9% pilot mod=1kHz	◇A	98MHz	IF coil inside FM frontend 1110	◇4	right channel min.
AM IF						
MW	450kHz connect pin 6 of IC 7101 (AM Osc.) with 3.3kΩ to Vcc	◇C Δf = ±10kHz V_{RF} = 0.5mV (as low as possible)	IC 7101 pin 36, 100nF, 220R	5111	◇5	max., f_o symmetric
			IC 7101 pin 40, 100nF, 220R, see remark [2]	5112		
AM AFC **MW**		◇C continuous wave V_{RF} = 2mV		5114	◇2	0mV ±2mV
AM RF [3]						
MW	1494kHz	◇B Δf = ±30kHz V_{RF} as low as possible	1494kHz	2106	◇5	max., f_o symmetric
	558kHz		558kHz	5102		
LW	198kHz		198kHz	5103		

ECO6 Sys Cenelec, 190599

Use Service Testprogram. By selecting the TUNER TEST test frequencies will be stored as preset frequencies automatically.

[1] If sensitivity of frequency counter is too low adjust to max. channel separation (input signal: stereo left 90% + 9%, adjust output on right channel to minimum)

[2] RC network serves for damping the IF-filter while adjusting the other one.

[3] For AM RF adjustments the original frame antenna has to be used!
MW has to be aligned before LW.

↕ Repeat

9-3

TUNER BOARD ECO6 / SYSTEMS NON CENELEC

VERSION PROGRAMMING COMPONENTS

VERSION	6120	3156	3157	3170	7111
/00 /02 FM/MW/LW	X				
/00 /02 FM/MW		X			
/01 FM/MW			X		
/14 FM-OIRT/MW		X		X	
/17 FM/AM			X	X	
/06 FM-Japan/AM				X	X

X component mounted

VERSION DETECTION

LEGEND

ⓟ...for provision only
USA ... for USA version only
E-EU ... for East European version only
J ... for Japanese version only

...V FM mode stereo
...V MW mode
...V LW mode
EVM voltages measured while set is tuned to a strong transmitter

Signal path
FM
AM
MPX (Audio Frequency)
AF - left/right

ECO6 Sys-non Cenelec, 000911

1101 A1
1102 B1
1103 F2
1120 E14
1130 A2
1131 B2
1132 G13
2101 B3
2102 B1
2103 C7
2104 B3
2105 A2
2106 F3
2107 F4
2119 H6
2120 G6
2124 H6
2125 H6
2126 F7
2127 E7
2128 C8
2129 C7
2130 F11
2131 G8
2132 G8
2133 G8
2134 H8
2135 H9
2136 G14
2137 G13
2138 F9
2139 G9
2140 G9
2141 F10
2143 G12
2144 G11
2145 F12
2146 E12
2147 E12
2148 E12
2149 H7
2150 A10
2152 E4
2153 E5
2154 D5
2155 D5
2159 F6
2161 C11
2163 D11
2164 F10
2165 C7
2166 E11
2167 E11
2169 H8
3101 E4
3102 D4
3103 C6
3104 A7
3105 B6
3132 G5
3134 H6
3141 E7
3142 E7
3143 G7
3144 H7
3145 F8
3146 G13
3152 G14
3153 G13
3154 G13
3155 G11
3156 C12
3157 C12
3158 E13
3159 D13
3160 D12
3161 D13
3167 F12
3168 F11
3169 E11
3170 C12
3172 G12
3176 G7
3181 E6
5102 F2
5109 B9
5110 B10
5111 A8
5112 A11
5114 B11
5119 G9
5121 E11
5123 G5
5130 E5
5131 C6
6103 B2
6105-1 F3
6105-2 G5
6106 C3
6107 G13
6120 C13
6130 E5
6131 D5
7101 C8
7102 C6
7103 H7
7111 C13
7112 G12
T102 B2
T103 B2
T105 F2
T106 F2
T109 B6
T110 F5
T111 F4
T112 F7
T113 A8
T114 B10
T115 A8
T116 F10
T117 G13
T118 G11
T120 F13
T121 F13
T122 F13
T123 F13
T124 G14
T125 F14
T126 F13
T127 F13
T128 D7
T140 F11
T141 F10
T142 F10

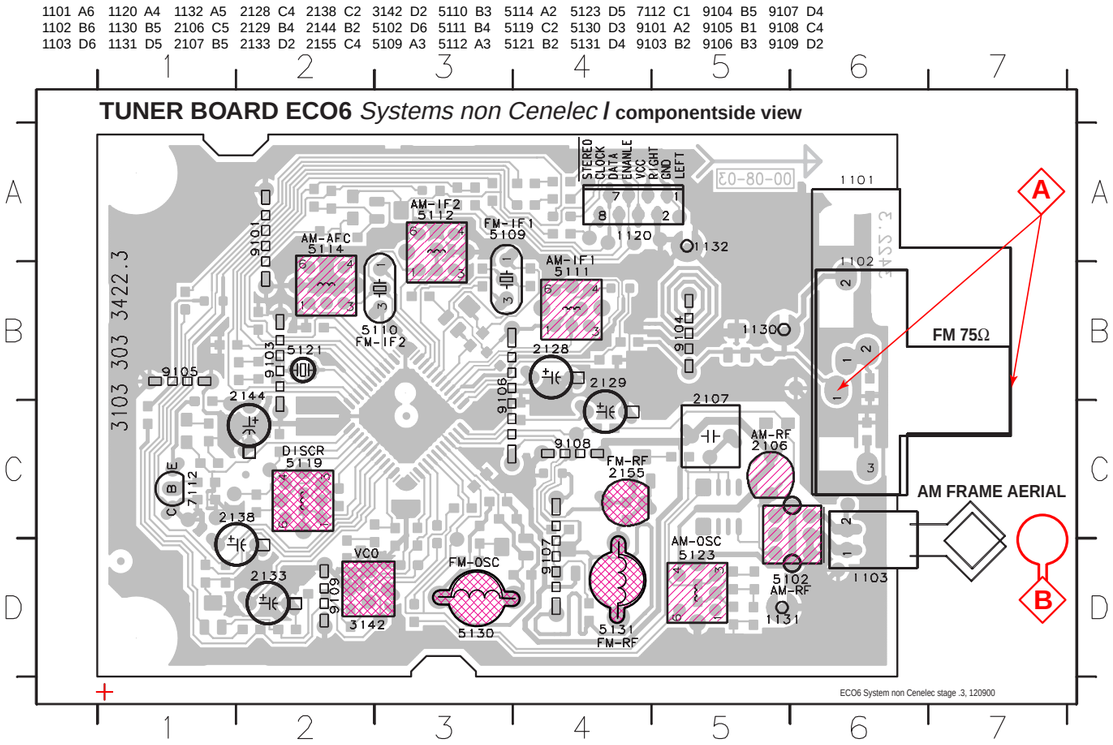

2101 B4 2119 D3 2130 D5 2137 A4 2146 B7 2153 C5 2165 C4 3103 C4 3134 D3 3152 A4 3158 A4 3169 B6 4106 C4 6107 C7 7103 D7
2102 B1 2120 D3 2131 C5 2139 C6 2147 A5 2154 C4 2166 B6 3104 B4 3141 C5 3153 A4 3159 A5 3170 A6 4107 C5 6120 A6 7111 A5
2103 D4 2124 D3 2132 D6 2140 C6 2148 B6 2159 C5 2167 B6 3105 C4 3143 D6 3154 C7 3160 A5 3172 C7 4108 C5 6130 D4 7119 B5
2104 B4 2125 D3 2134 D7 2141 C6 2149 D6 2161 A6 2169 A4 3113 B5 3144 B7 3155 C7 3161 A5 3176 D6 6103 B3 6131 C4
2105 C1 2126 D6 2135 D7 2143 C7 2150 B5 2163 B6 3101 D5 3119 B5 3145 C5 3156 A6 3167 B7 3181 D4 6105 C3 7101 C5
2112 B5 2127 C5 2136 A4 2145 A5 2152 C5 2164 C6 3102 C3 3132 D5 3146 C7 3157 A6 3168 C7 4103 B5 6106 C3 7102 D4

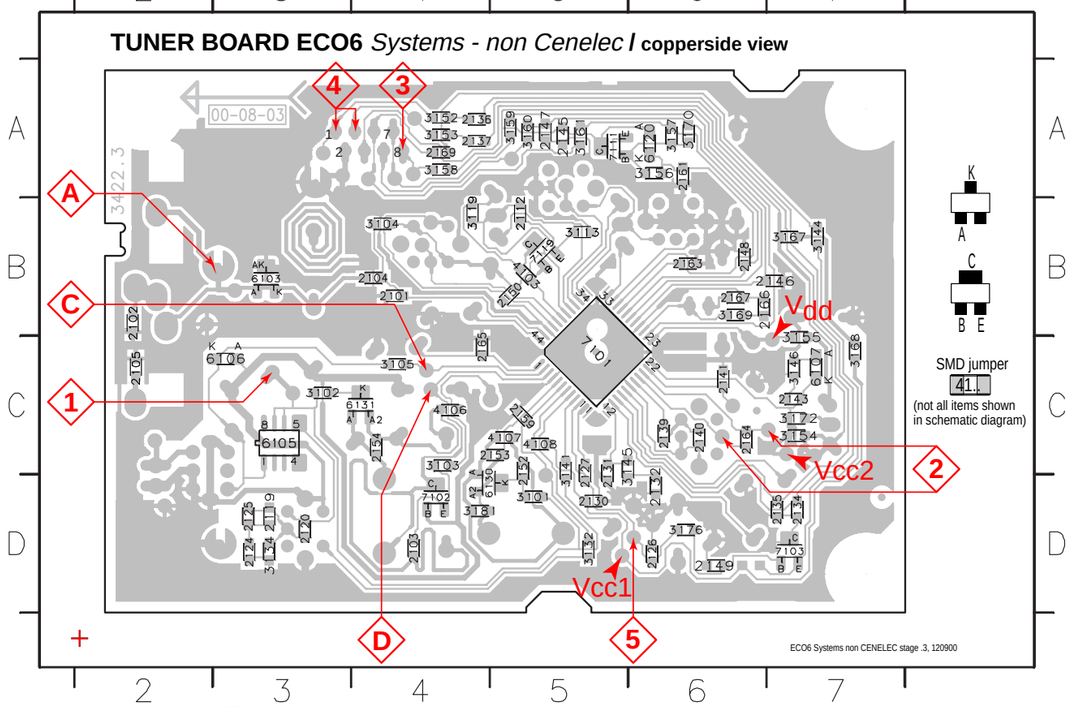

These assembly drawings show a summary of all possible versions.
For components used in a specific version see schematic diagram respectively partslist.

TUNER ADJUSTMENT TABLE (ECO6 FM/MW- and FM/MW/LW - versions with AM-frame aerial)

Waverange	Input frequency	Input	Tuned to	Adjust	Output	Scope/Voltmeter
VARICAP ALIGNMENT						
FM 87.5 - 108MHz (65.81 - 74, 87.5 - 108MHz)			108MHz	5130	1	8V ±0.2V
			87.5MHz (65.81MHz)	check		4.3V ±0.5V [5] (1.2V ±0.5V)
MW FM/AM-version, 10kHz grid 530 - 1700kHz			1700kHz	5123		8V ±0.2V
			530kHz	check		1.1V ±0.4V
FM/MW-version, 9kHz grid 531 - 1602kHz			1602kHz	5123		6.9V ±0.2V
			531kHz	check		1.1V ±0.4V
LW 153 - 279kHz			279kHz	5122		8V ±0.2V
			153kHz	check		1.1V ±0.4V
MW FM/MW/LW- version, 9kHz grid 531 - 1602kHz			1602kHz	5123		8V ±0.2V
			531kHz	check		1.1V ±0.4V
FM IF						
FM	10.7MHz, 45mV continuous wave	D	IC 7101 pin 21 — shortcircuit to block AFC — 2141	5119	2	0 ± 3 mV DC
FM RF						
FM 87.5 - 108MHz (65.81 - 74, 87.5 - 108MHz)	108MHz	A	108MHz	2155	4	MAX
	87.5MHz (65.81MHz)	mod=1kHz Δf=±22.5kHz	87.5MHz (65.81MHz)	5131		
VCO						
FM	98MHz, 1mV continuous wave	A	98MHz	3142	3	152kHz ±1kHz [1]
AM IF						
MW	450kHz connect pin 6 of IC 7101 (AM Osc.) with 3.3kΩ to Vcc	C Δf=±10kHz V_{RF} = 0.5mV (as low as possible)	IC 7101 pin 36 — 100nF — 220R; IC 7101 pin 40 — 100nF — 220R — see remark [2]	5111	5	max. / f_o symmetric
				5112		
AM AFC **MW**		C continuous wave V_{RF} = 2mV		5114	2	0 ± 2 mV DC
AM RF [3]						
MW [4] FM/MW/LW- and FM/MW-version (9kHz grid) 531 - 1602kHz	1494kHz	B	1494kHz	2106	5	max. / f_o symmetric
	558kHz		558kHz	5102		
LW	198kHz		198kHz	5103		
MW FM/AM-version, 10kHz grid 530 - 1700kHz	1500kHz	Δf = ±30kHz V_{RF} as low as possible	1500kHz	2106		
	560kHz		560kHz	5102		

ECO6, Sys + PA with frame aerial, 170501

Use Service Testprogram. By selecting the TUNER TEST test frequencies will be stored as preset frequencies automatically.

1) If sensitivity of frequency counter is too low adjust to max. channel separation (input signal: stereo left 90% + 9%, adjust output on right channel to minimum)

2) RC network serves for damping the IF-filter while adjusting the other one.

3) For AM RF adjustments the original frame antenna has to be used !

4) MW has to be aligned before LW.

Repeat

5) 1.7V ±0.5V when alternative varicap. BB804 is used on pos. 6130, 6131

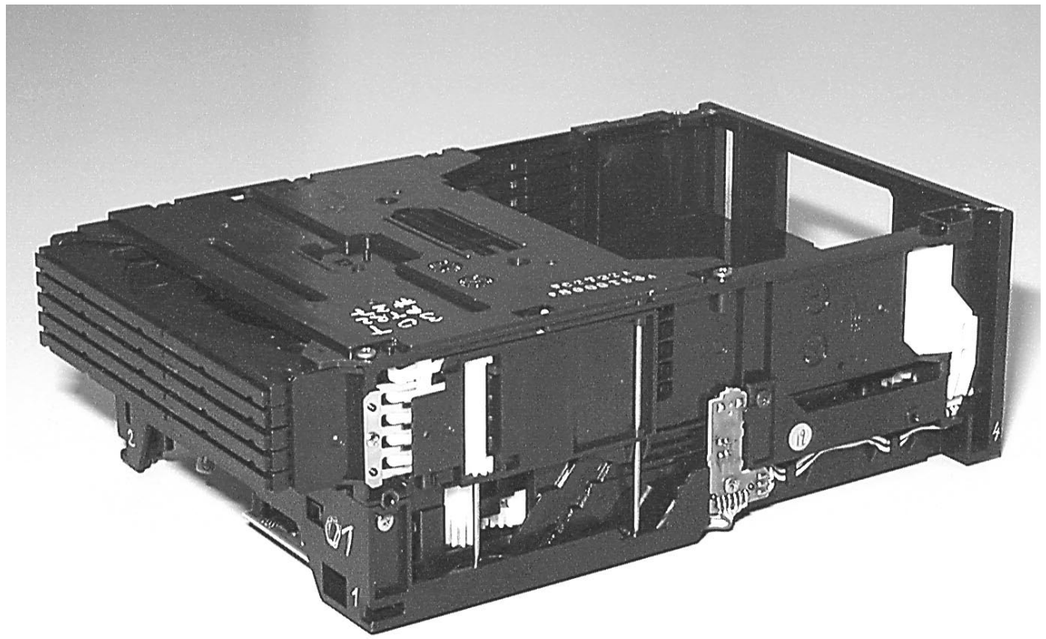

5DTC Module

(MP3 version)

Layout stage CD .5/ Control .4

TABLE OF CONTENTS

Service hints 10-1
Location of Printed Circuit Boards 10-3
Wiring 10-3
Emergency opening 10-4
Location of switches 10-4
Blockdiagram 10-5

CD Board
Circuit Diagram 10-6
Component Layout side A 10-7
Component Layout side B 10-8
Control Board
Circuit Diagram 10-9
Component Layout 10-9
MP3 Board (for orientation only)
Circuit Diagram 10-10
Component Layout 10-11

Exploded view loader 10-12
Partslist 10-13

Service Hints

In case of symptom „skipping tracks“ perform following actions:

1. VERIFY THE COMPLAINT

PLAYABILITY CHECK

Use CDDA SBC 444A: 4822 397 30245
TR 14 (600µ black dot) maximum at 01:15
TR 19 (fingerprint)
TR 10 (1000µ wedge)

Use CD-RW Printed Audio Disk 7104 099 96611
TR 3 (Fingerprint)
TR 8 (600µ black dot) maximum at 01:00

- playback of all these tracks without audible disturbance
- jump forward/backward within a reasonable time

2. CLEAN THE LENS

CD DRIVE – LENS CLEANING

Before touching the lens it is advised to clean the surface of the lens by blowing clean air over it in order to avoid that little particles make scratches on the lens.

Because the material of the lens is synthetic and coated with a special anti-reflectivity layer, cleaning must be done with a non-aggressive cleaning fluid. It is advised to use “KODAK LENS CLEANER CAT 176 71 36”, available in normal photo shops.

The actuator is a very precise mechanical component and may not be damaged in order to guarantee its full function. It is advised to clean the lens gently (don’t press too hard) with a soft and clean cotton bud moistened with the special lens cleaner.

The direction of cleaning must be in the way as indicated in the picture below.

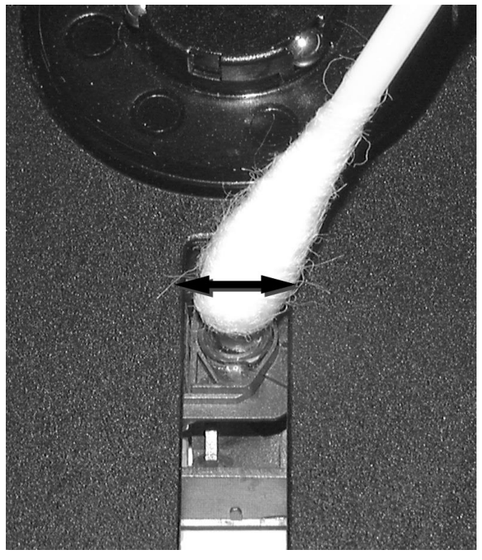

3. MEASURE THE EYE-PATTERN SIGNAL

EYE-PATTERN SIGNAL – JITTER MEASUREMENT

Measure the signal direct on resistor 3898 using an oscilloscope (see also chapter 10-9).

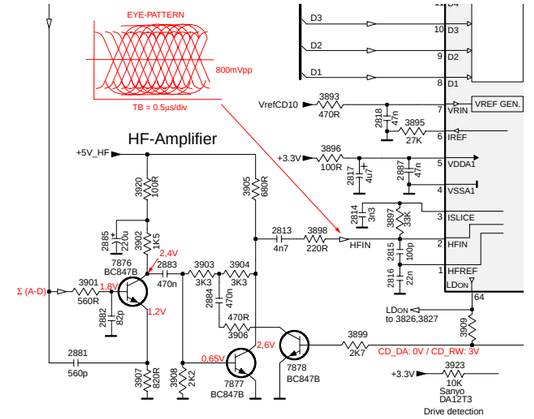

See below examples of the signal. Amplitude should read at least 700mVpp using SBC444A.

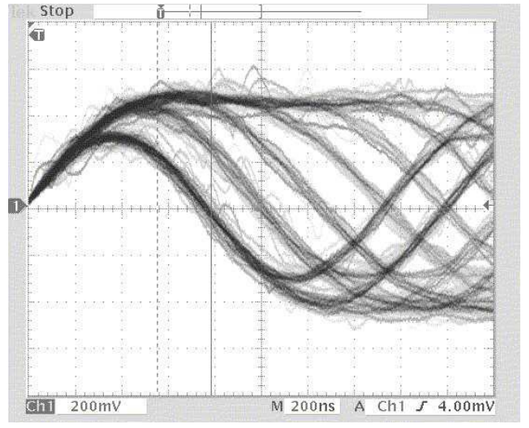

good

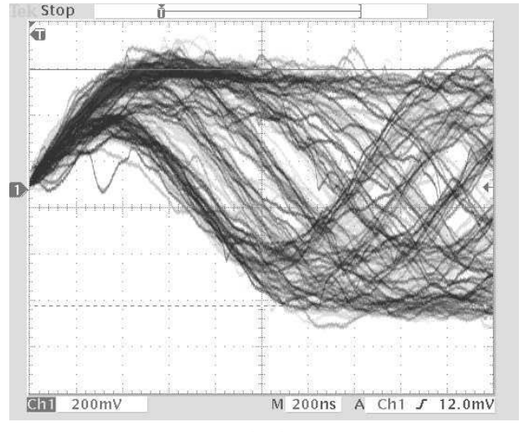

bad

If the oscilloscope shows a signal like the ‘bad’ one, and/or the amplitude decreases within 1minute - the CD drive has to be replaced.

Service Hints

4. MEASURE THE LASER CURRENT

CD DRIVE – LASER CURRENT MEASUREMENT

The laser current can be measured as a voltage drop on resistor 3820. Typical value 170 - 190mV for CD-DA respectively 200 - 220mV for CD-RW.

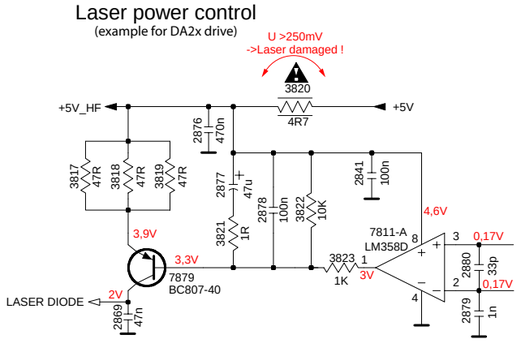

5. MEASURE THE OFFSETS OF THE CD-DRIVE

CD DRIVE – OFFSET MEASUREMENT

Each photodiode of the CD-drive may have an offset. This offset has to be compensated by the signal processor. A high offset of the CD-drive leads to poor playability of some CDs (skipping tracks).

Start the **Service Test Program** - section „Focus Test“ without a CD. Focus sensitivity = CD-RW.

Use a DC Millivoltmeter for measurement. The offsets can be measured direct on the connector. See drawing below.

The values from diode A-D should read 0±10mV. Diodes E and F are less critical.

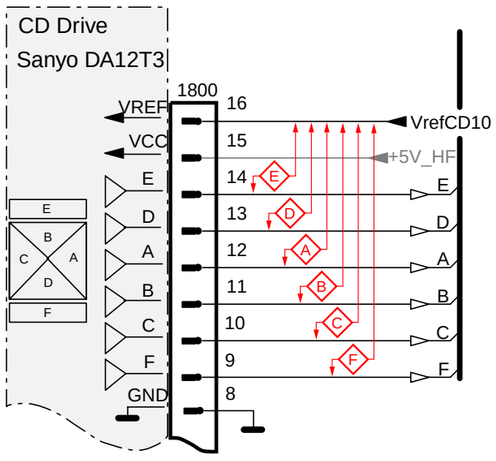

If one of the offsets is higher than ±10mV the CD drive has to be replaced.

10-2

WARNING

CHARGED CAPACITORS ON THE SERVO BOARD MAY DAMAGE THE CD DRIVE ELECTRONICS WHEN CONNECTING A NEW CDM MECHANISM. THAT´S WHY, BESIDES THE SAFETY MEASURES LIKE
• SWITCH OFF POWER SUPPLY
• ESD PROTECTION
ADDITIONAL ACTIONS MUST BE TAKEN BY THE REPAIR TECHNICIAN.

The CD drive forms a compact building block with the CD Board.

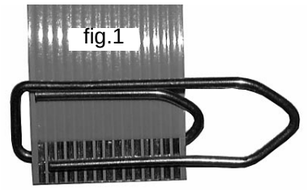

<u>The following steps have to be done when replacing the CD mechanism:</u>

1. Desolder disc and slide motor
2. Loosen 2x screw
1. Disconnect flexfoil from old CD drive
2. Put a paperclip over contacts of flexfoil to short-circuit the contacts (fig.1)
3. Remove old CD drive
4. Mount new CD drive to CD board
5. Solder disc and slide motor **after** fixing the drive to the board
5. Move slide outside
6. Remove paperclip from flexfoil
7. Connect flexfoil to new CD drive
8. Remove ESD-protection (solder joint) from laserunit (see picture below)

Attention: The laser diode of this CD drive is protected against ESD by a solder joint which shortcircuits the laserdiode to ground.
For proper functionality of the CD drive this solder joint must be removed **after** connection the drive to the set.

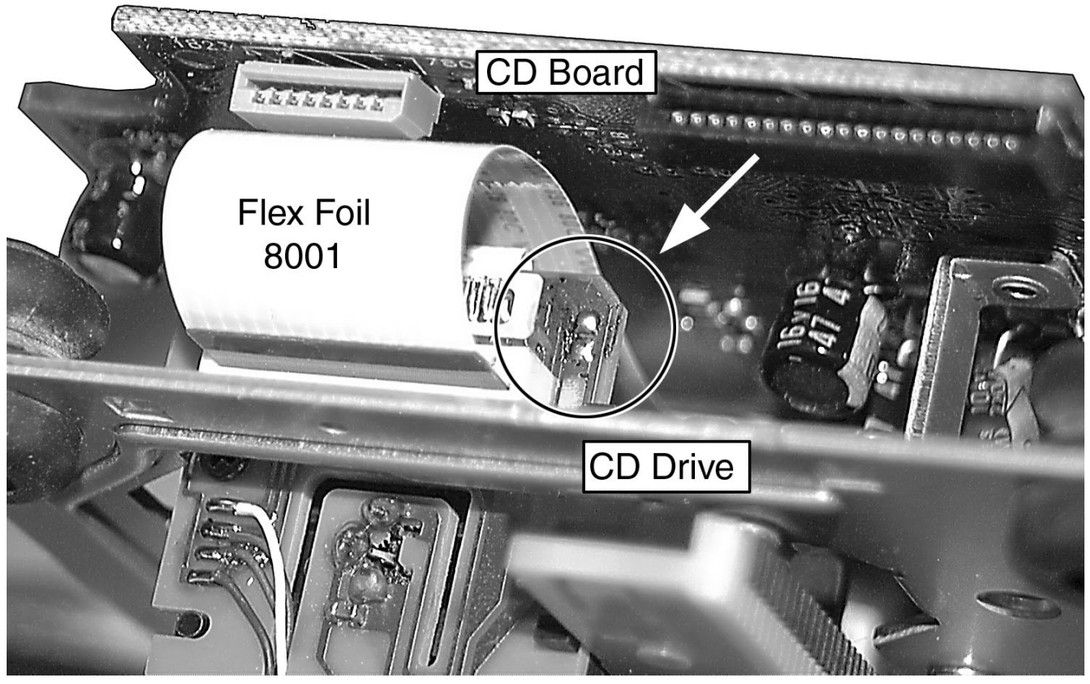

Location of Printed Circuit Boards

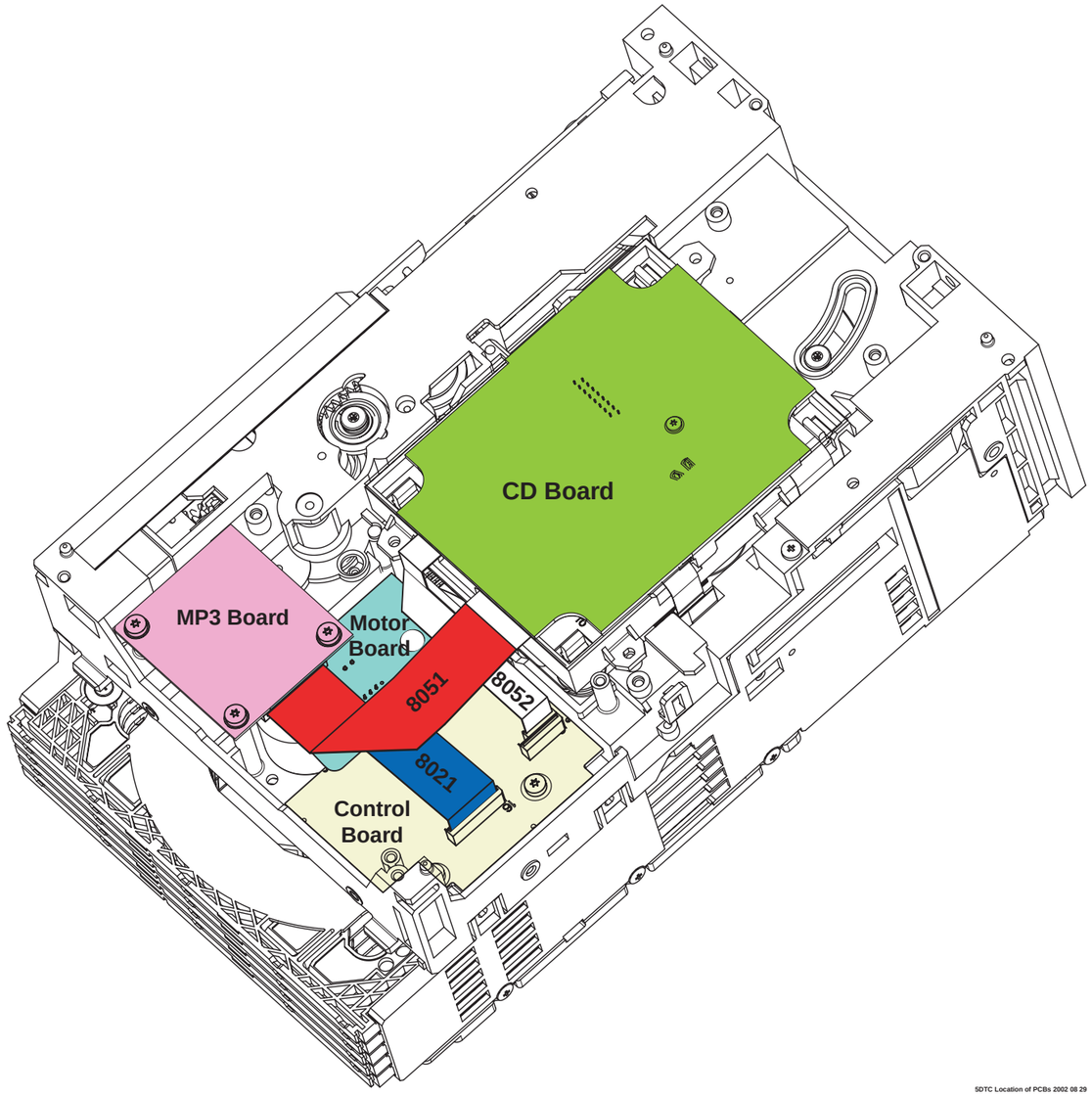

5DTC Location of PCBs 2002 08 29

Wiring Diagram 5DTC Module

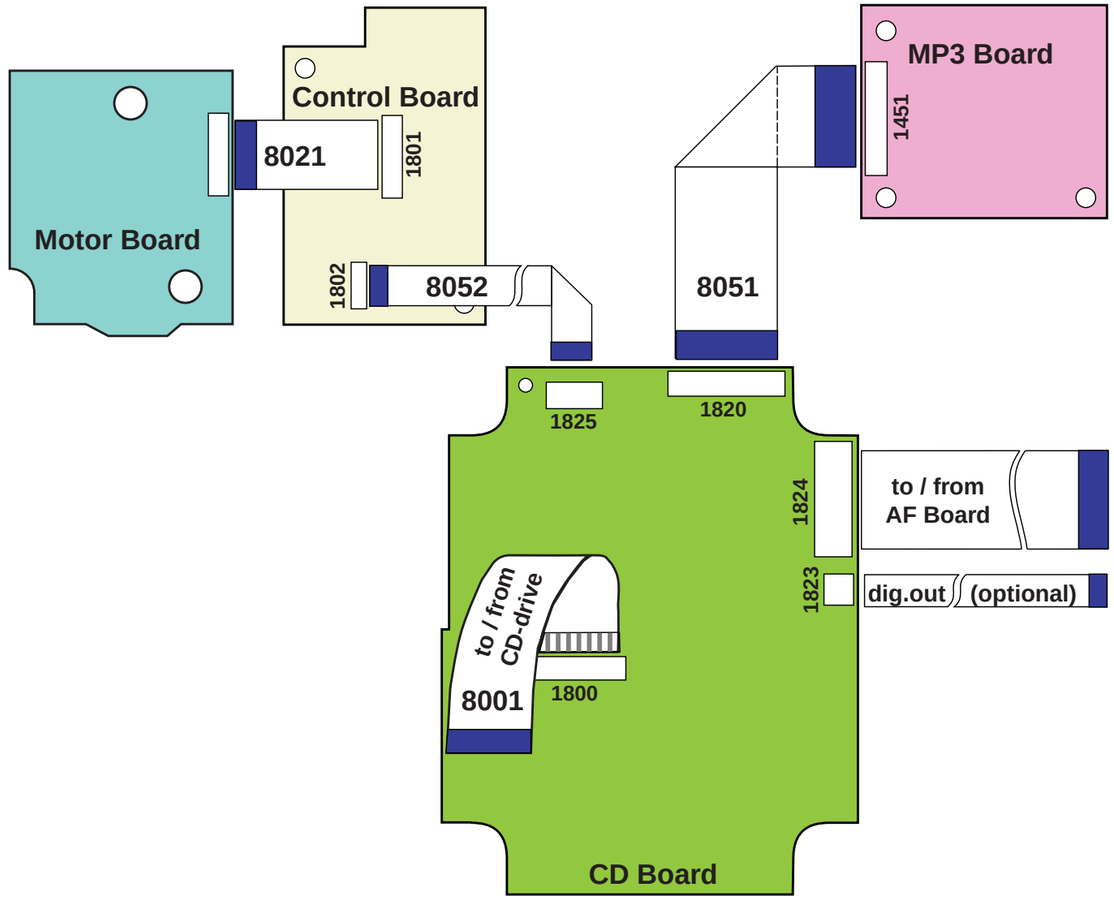

5DTC Wiring Diagram 2002 08 30

The FFC-Cables are available as sparepart.

8001	3103 308 93090	FFC CABLE 16Pin 80mm BD	Connection from CD Board to CD Drive
8051	3103 308 93100	FFC-CABLE 19Pin 90mm AD	Connection from CD Board to MP3 Board
8052	3103 308 93120	FFC CABLE 8Pin 80mm BD	Connection from CD Board to Control Board
8021	3103 308 93110	FFC-CABLE 16Pin 60mm AD	Connection from Control Board to Motor Board

Emergency opening of the trays

The trays of the 5DTC are mechanically locked.

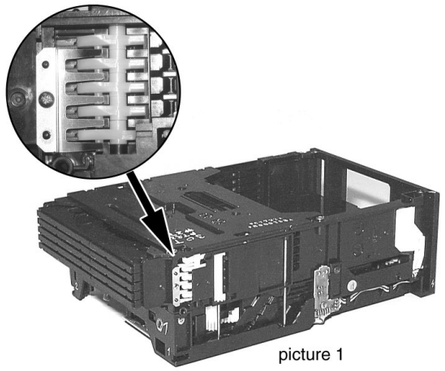

picture 1

To open tray 1, 2 and 3 move lever (pos 29) backwards (e.g. with a screwdriver - see picture 2) to its endposition.

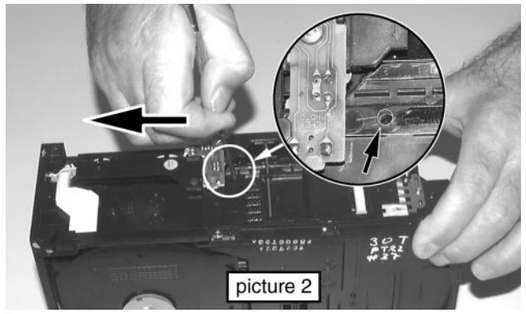

Release the locking mechanism and pull out the tray (see picture 3).

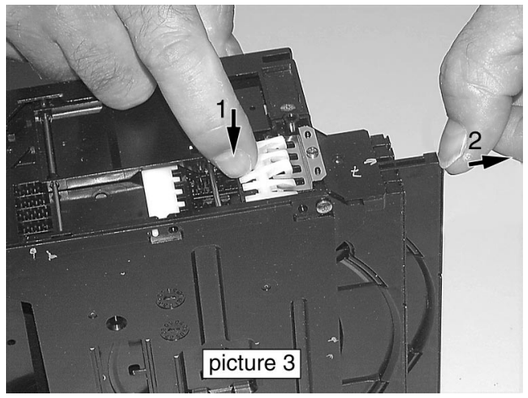

To open tray 4 and 5 move lever (pos 29) forward to its endposition (see picture 4).

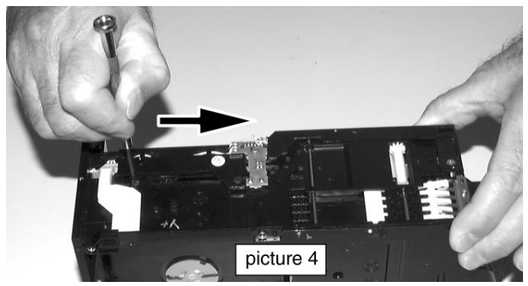

Release snap as shown in picture 5 and pull tray out.

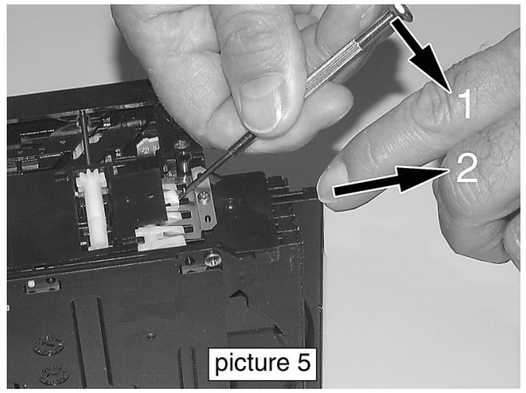

To remove a CD from Play Position perform following steps:

1. Open tray 1 as described before.
2. Tear the tray out with speed (see picture 6). The tray can be inserted aftewards without any alignment.

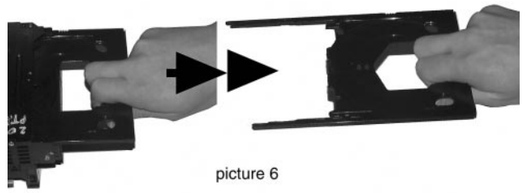

picture 6

3. Move lever (pos 29) forward to its endposition (see picture 4).
4. Push lever (pos 31) forward (see picture 7).

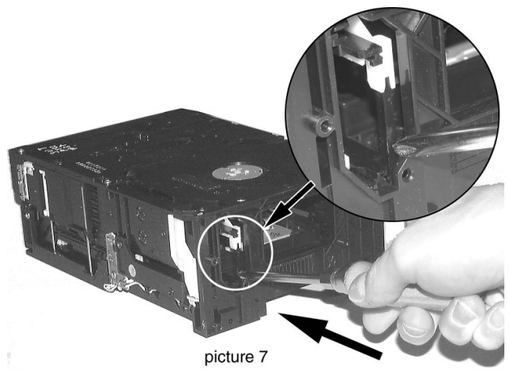

picture 7

5. Remove CD.

Location of switches

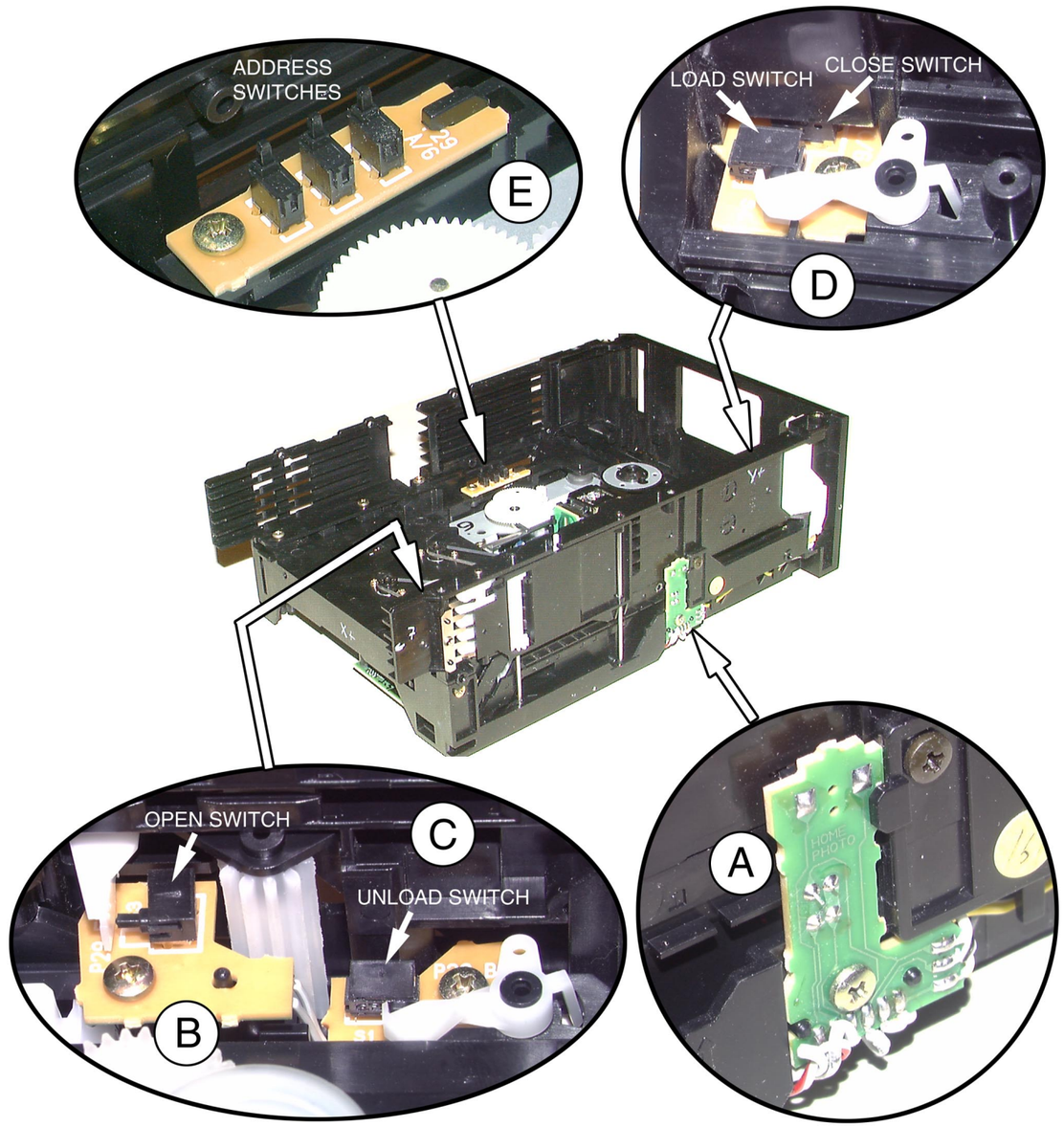

10-5

BLOCK DIAGRAM 5DTC MP3 Version

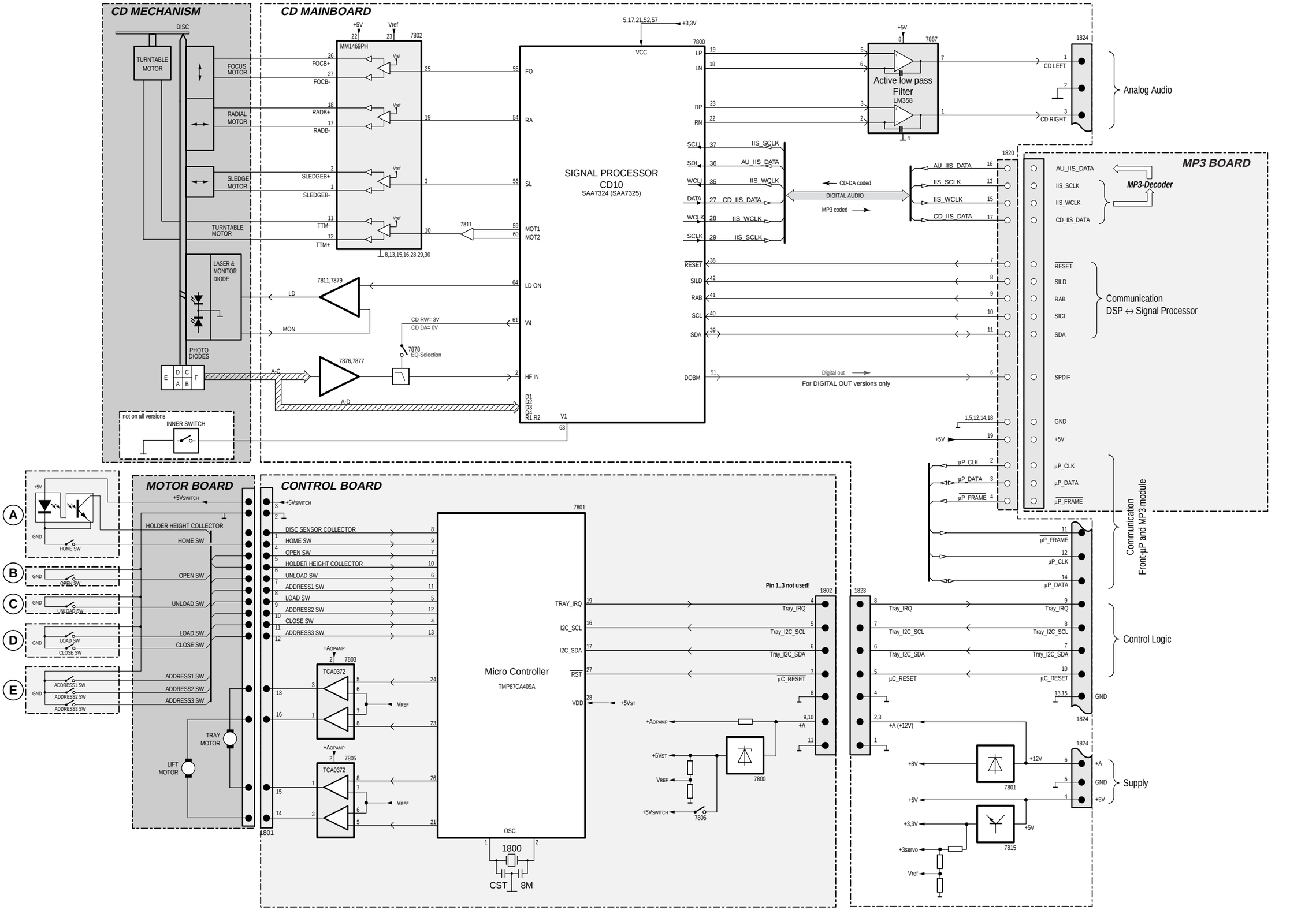

10-6

5DTC CD BOARD

PHOTODIODES A..F

Laser power control

U >250mV
->Laser damaged !

CD Drive
Sanyo DA12T3

ESD sensitive lines!

Focus search

Motor Driver

HF-Amplifier

EYE-PATTERN
800mVpp
TB = 0.5µs/div

For sets with DIGITAL OUT only

Active Low Pass

LEFT CHANNEL

RIGHT CHANNEL

Signal Processor

Digital MP3 Data

Digital Audio Data

Inner switch detection

Drive detection

During speed up

During brake

accelerates disc

brakes disc

CD_DA: 0V / CD_RW: 3V

to / from MP3 Board

to / from 5DTC Control Board

to / from Audio / Combi Board

...V DC voltages measured in *PLAY MODE* with following conditions:
"+A" = 12V
"+5V" = 5V

5DTC CD Board MP3 Version 20040616

10-7

Mapping for Circuit Diagram

1800	E1	3827	F5
1810	D9	3828	G5
1820	B15	3829	C10
1823	F15	3831	D14
1824	H15	3832	E14
2187	F9	3833	C9
2812	J10	3834	D13
2813	G8	3835	D13
2814	G9	3836	I6
2815	G9	3837	E14
2816	G9	3838	G13
2817	F9	3839	E14
2818	F9	3840	B14
2819	C9	3841	I6
2820	C9	3842	J9
2821	C9	3843	J9
2822	C10	3844	J10
2823	C10	3845	F14
2824	I12	3846	J1
2825	C11	3847	H5
2826	A15	3848	H5
2827	E13	3849	F14
2828	E13	3850	H4
2829	J9	3851	H5
2830	J10	3852	H5
2831	H11	3854	H4
2832	H5	3855	J4
2833	H4	3856	I5
2834	H5	3859	I6
2836	G3	3860	I6
2837	G3	3861	J6
2838	I4	3862	I5
2839	I5	3864	B11
2840	J4	3865	A14
2841	F4	3866	F2
2843	B12	3867	B11
2844	B12	3868	B12
2845	B13	3869	B13
2846	B14	3870	B14
2847	I11	3871	B14
2848	A12	3872	G2
2849	A11	3873	A11
2850	A13	3874	A11
2851	A14	3875	A12
2852	I5	3876	A13
2853	H4	3877	A14
2853	J11	3878	C12
2854	A12	3879	A14
2855	B11	3880	I12
2860	A6	3881	J12
2861	A6	3883	A12
2863	B6	3884	B12
2864	C6	3888	D14
2865	C6	3889	C12
2866	B6	3890	C13
2869	F2	3891	J10
2870	A7	3892	J10
2871	A7	3893	F8
2872	B7	3895	F9
2873	B7	3896	F8
2874	C7	3897	G9
2875	C7	3898	G8
2876	E3	3899	H8
2877	F3	3901	G6
2878	F3	3902	G7
2879	F5	3903	G7
2880	F5	3904	G8
2881	H6	3905	F8
2882	G6	3906	H8
2884	G7	3907	H7
2885	G6	3908	H7
2886	G11	3909	H9
2893	G7	3910	E14
3801	A6	3911	H13
3802	A6	3912	A11
3803	B6	3917	H11
3804	B6	3918	H4
3805	C6	3919	H4
3806	C6	3920	F7
3807	A7	3922	H10
3808	A7	3923	H9
3809	B7	3925	A11
3810	B7	3926	A11
3811	C7	3927	B11
3812	C7	3928	B11
3813	D6	5001	H5
3814	D6	5002	H11
3815	E6	6877	J11
3816	D14	7800	D11
3816	E6	7801	I11
3817	F2	7802	G2
3818	F2	7810-A	B13
3819	F3	7810-B	A13
3820	E4	7811-A	F4
3821	F3	7811-B	I4
3822	F4	7875	I11
3823	F4	7876	G7
3824	F5	7877	H8
3825	F5	7878	H8
3826	F5	7879	F3

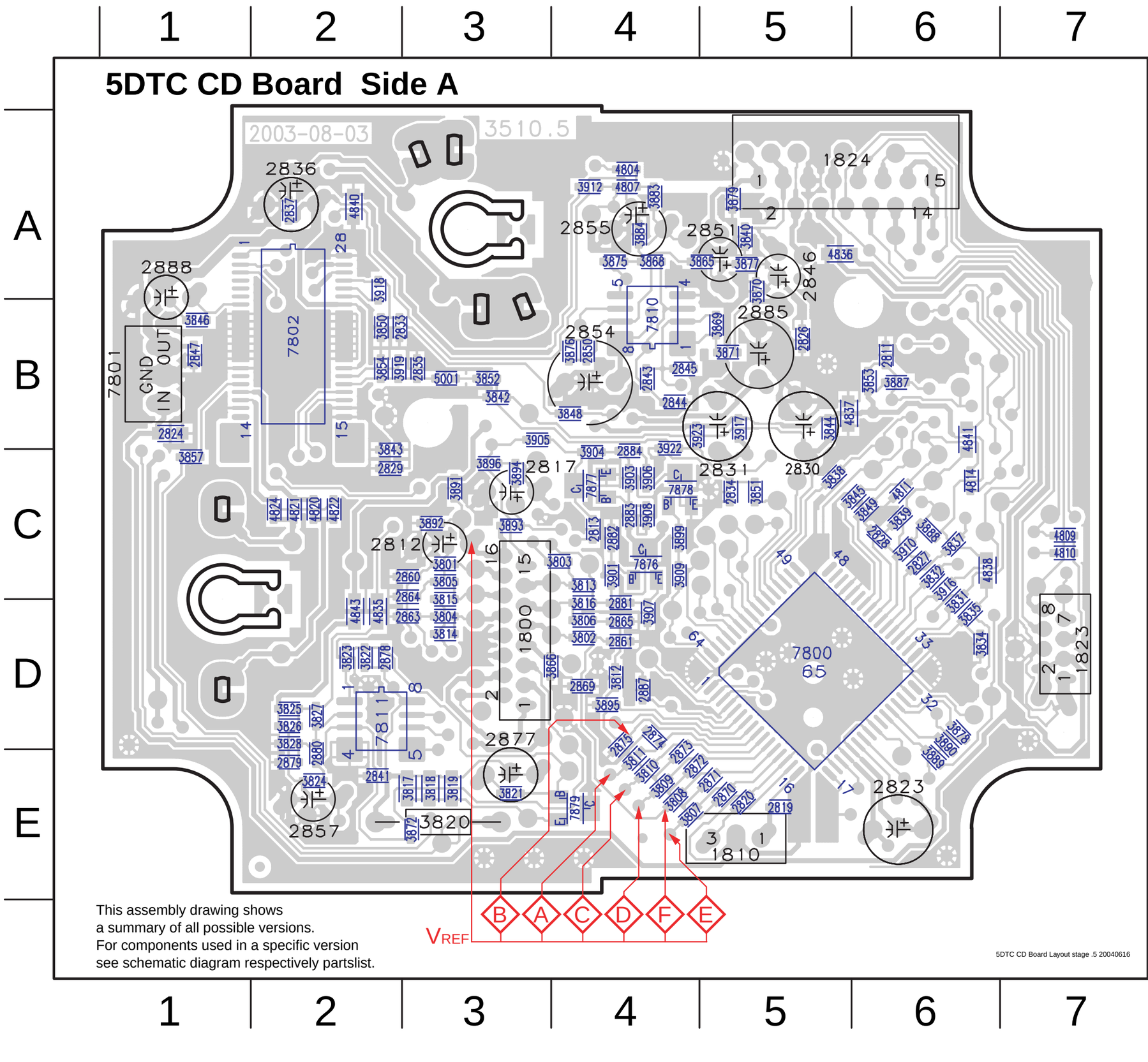

Mapping for Component Layout

1800	D3	3851	C5
1810	E5	3852	B3
1823	D7	3853	B6
1824	A5	3854	B2
2811	B6	3857	C1
2812	C3	3865	A4
2813	C4	3866	D3
2817	C3	3868	A4
2819	E5	3869	B5
2820	E5	3870	A5
2823	E6	3871	B5
2824	B1	3872	E3
2826	B5	3875	A4
2827	C6	3876	B4
2828	C6	3877	A5
2829	C2	3878	D6
2830	B5	3879	A5
2831	B5	3883	A4
2833	B2	3884	A4
2834	C5	3887	B6
2835	B3	3888	C6
2836	A2	3889	E6
2837	A2	3890	E6
2841	E2	3891	C3
2843	B4	3892	C3
2844	B4	3893	C3
2845	B4	3894	C3
2846	A5	3895	D4
2847	B1	3896	C3
2850	B4	3899	C4
2851	A5	3901	C4
2854	B4	3903	C4
2855	A4	3904	C4
2857	E2	3905	B3
2860	C3	3906	C4
2861	D4	3907	D4
2863	D3	3908	C4
2864	D3	3909	C4
2865	D4	3910	C6
2869	D4	3912	A4
2870	E5	3916	C6
2871	E5	3917	B5
2872	E4	3918	A2
2873	E4	3919	B2
2874	D4	3922	C4
2875	E4	3923	B4
2877	D3	4804	A4
2878	D2	4807	A4
2879	E2	4809	C7
2880	E2	4810	C7
2881	D4	4811	C6
2882	C4	4814	C6
2883	C4	4820	C2
2884	C4	4821	C2
2885	B5	4822	C2
2887	D4	4824	C2
2888	A1	4835	D2
3801	C3	4836	A5
3802	D4	4837	B5
3803	C4	4838	C6
3804	D3	4840	A2
3805	C3	4841	B6
3806	D4	4843	D2
3807	E4	5001	B3
3808	E4	7800	C6
3809	E4	7801	B1
3810	E4	7802	B2
3811	E4	7810	B4
3812	D4	7811	D2
3813	C4	7876	C4
3814	D3	7877	C4
3815	D3	7878	C4
3816	D4	7879	E4
3817	E3		
3818	E3		
3819	E3		
3820	E3		
3821	E3		
3822	D2		
3823	D2		
3824	E2		
3825	D2		
3826	D2		
3827	D2		
3828	D2		
3831	D6		
3832	C6		
3834	D6		
3835	D6		
3837	C6		
3838	C5		
3839	C6		
3840	A5		
3842	B3		
3843	C2		
3844	B5		
3845	C6		
3846	B1		
3848	B4		
3849	C6		
3850	B2		

10-8

5DTC CD Board Side B

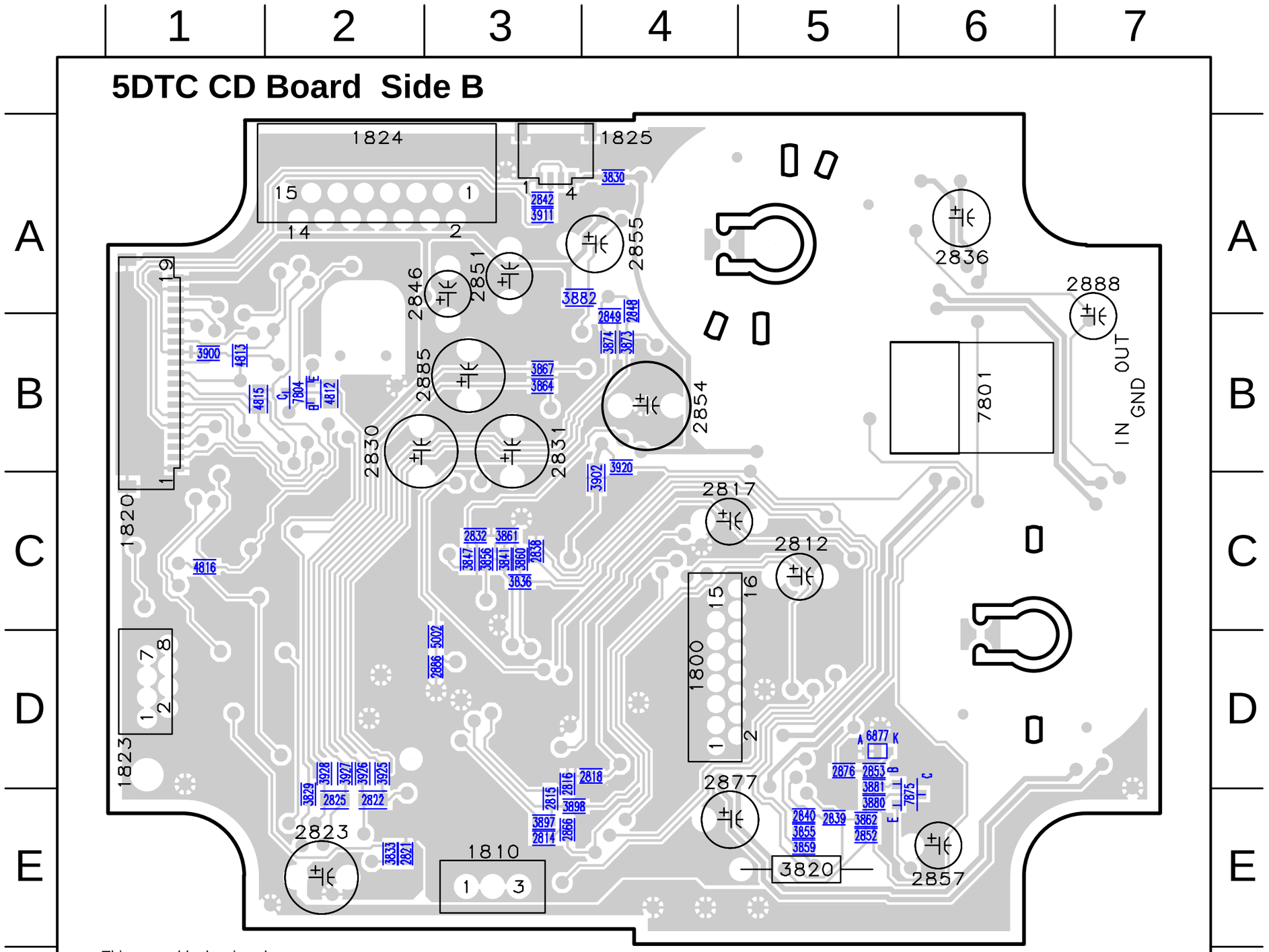

This assembly drawing shows
a summary of all possible versions.
For components used in a specific version
see schematic diagram respectively partslist.

5DTC CD Board Layout stage .4 2002-10-01

1800 D5
1810 E3
1820 C1
1823 D1
1824 A3
1825 A4
2812 C5
2814 E4
2815 E4
2816 D4
2817 C5
2818 D4
2821 E3
2822 E3
2823 E2
2825 E2
2830 B2
2831 B4
2832 C3
2836 A6
2838 C4
2839 E5
2840 E5
2842 A4
2846 A3
2848 A4
2849 B4
2851 A3
2852 E6
2853 D6
2854 B5
2855 A4
2857 E6
2866 E4
2876 D5
2877 D5
2885 B3
2886 D3
2888 A7
3820 E5
3829 E2
3830 A4
3833 E3
3836 C3
3841 C3
3847 C3
3855 E5
3856 C3
3859 E5
3860 C3
3861 C3
3862 E6
3864 B4
3867 B4
3873 B4
3874 B4
3880 E6
3881 D6
3882 A4
3897 E4
3898 E4
3900 B1
3902 C4
3911 A4
3920 B4
3925 D3
3926 D2
3927 D2
3928 D2
4812 B2
4813 B2
4815 B2
4816 C1
5002 D3
6877 D6
7801 B6
7804 B2
7875 E6

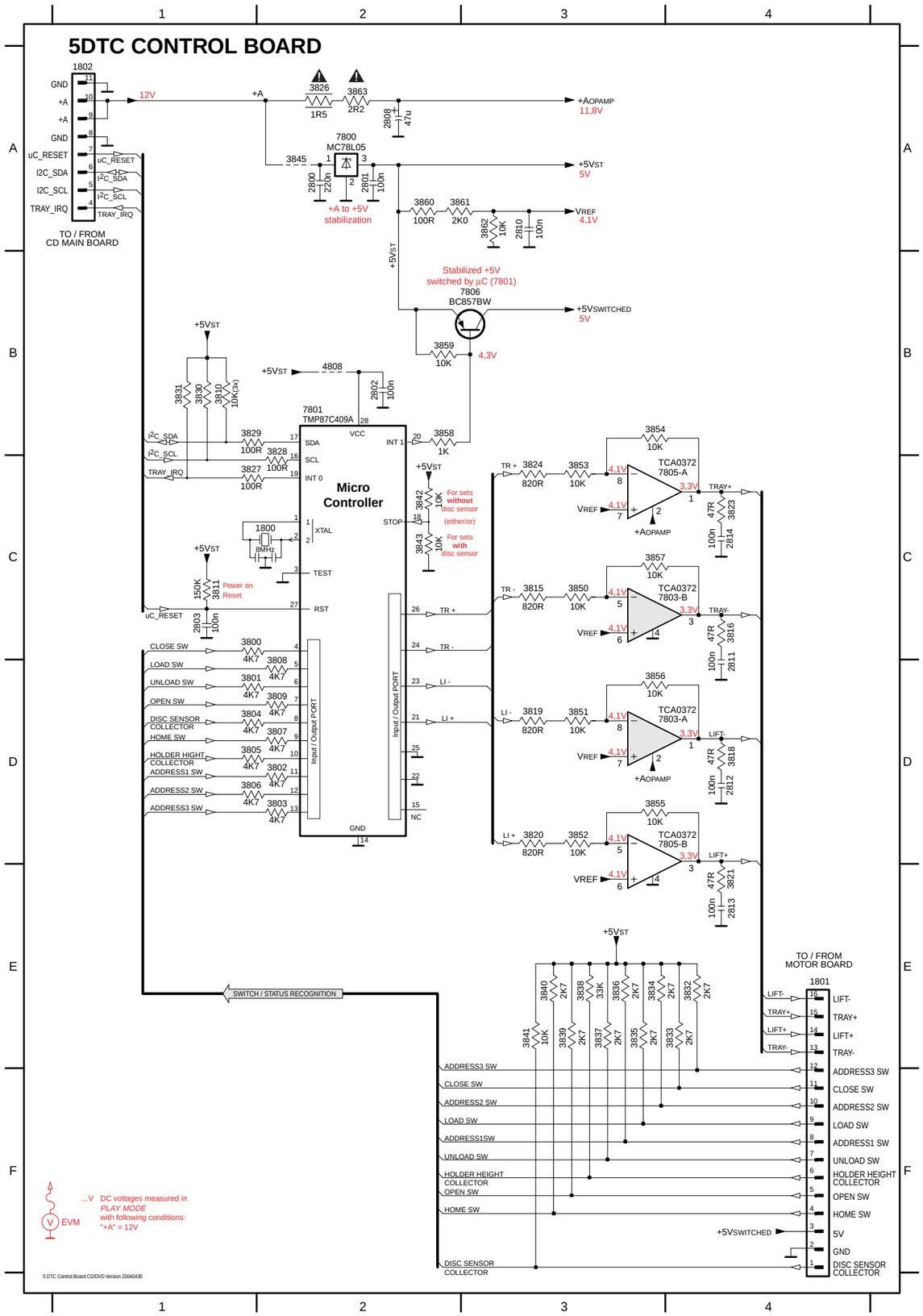

Mapping for Circuit Diagram

1800	C2	2810	A3	3804	D1	3811	C1	3824	C3	3833	E4	3841	E3	3854	B3	3862	A3	7805-B	D3
1801	E4	2811	D4	3805	D1	3815	C3	3826	A2	3834	E3	3842	C2	3855	D3	3863	A2	7806	B3
1802	A1	2812	D4	3806	D1	3816	C4	3827	C1	3835	E3	3843	C2	3856	D3	4808	B2		
2800	A2	2813	E4	3807	D2	3818	D4	3828	C2	3836	E3	3845	A2	3857	C3	7800	A2		
2801	A2	2814	C4	3808	D1	3819	D3	3829	B1	3837	E3	3850	C3	3858	B2	7801	B2		
2802	B2	3800	C1	3808	D2	3820	D3	3830	B1	3838	E3	3851	D3	3859	B3	7803-A	D3		
2803	C1	3802	D2	3809	D2	3821	E4	3831	B1	3839	E3	3852	D3	3860	A2	7803-B	C3		
2808	A2	3803	D2	3810	B1	3823	C4	3832	E4	3840	E3	3853	C3	3861	A2	7805-A	C3		

Mapping for Component Layout

1800	B2	2810	A5	3806	C4	3819	A4	3832	C4	3843	A2	3857	A5	4804	A2	4816	D2	7802	A2
1801	C4	2811	A5	3807	C3	3820	A4	3833	B2	3845	D2	3858	B5	4805	C1	4817	A6	7803	A5
1802	C2	2812	A6	3808	B2	3821	B5	3834	C4	3847	B1	3859	C5	4806	A2	4818	C5	7804	B2
2800	D2	2813	B5	3809	C3	3823	B6	3835	C2	3848	B1	3860	C5	4807	C1	4819	A6	7806	C5
2801	D2	2814	B6	3810	C2	3824	A4	3836	C4	3850	A4	3861	B5	4808	C2	4820	B5	9801	C5
2802	A2	3800	B2	3811	A2	3826	B6	3837	C3	3851	A4	3862	A5	4809	C5	4821	C3	9802	B2
2803	B1	3801	C3	3812	A1	3827	B2	3838	C4	3852	A4	3863	B6	4810	B2	4822	C3	9804	A5
2804	C2	3802	C4	3813	B2	3828	C2	3839	C3	3853	A4	4800	C2	4811	C1	4823	B1		
2805	C1	3803	C4	3815	A4	3829	B2	3840	C4	3854	B5	4801	C2	4812	B2	6801	B1		
2808	A6	3804	C3	3816	A5	3830	C2	3841	C3	3855	B5	4802	C2	4813	B6	7800	D2		
2809	C2	3805	C4	3818	A6	3831	C1	3842	A2	3856	A6	4803	D1	4814	A4	7801	B4		

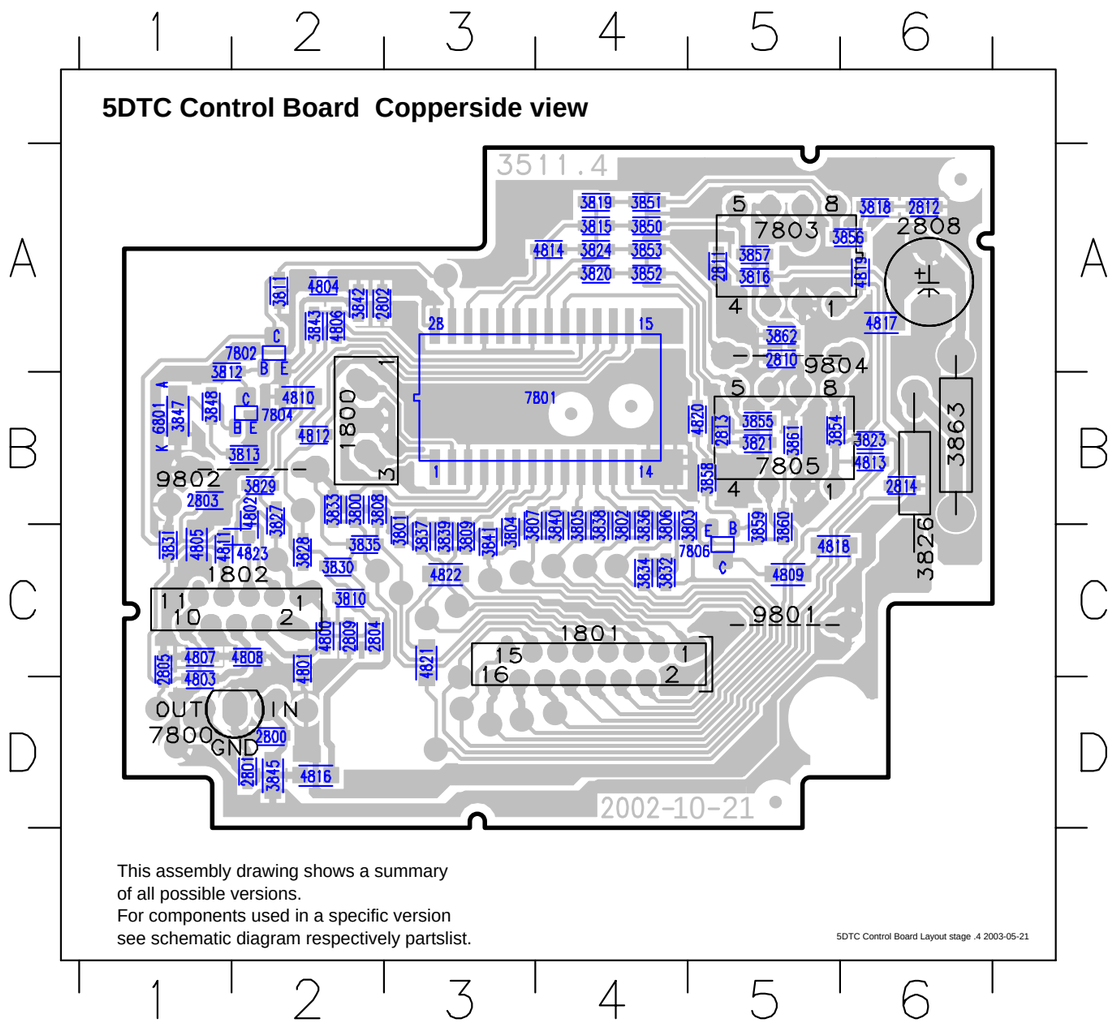

10-10

MP3 Board - Circuit Diagram

FOR ORIENTATION ONLY

MP3-CD-2002 BOARD (mask & flash version)
MP3-CD03 BOARD (mask version)

7451

DSP

For Flash version: TMS320DA150PGE160
For ROM version: TMS320D16078PGE (MP3-CD-2002)
For ROM version: TMS320D1608xPGE (MP3-CD03)

only for FLASH version

for CD Text version only

for 5V front uP

for 3.3V versions only

for MP3CD03

for MP3CD2002

for provision only

Voltage stabilisation

RESET

pin allocation

	MP3CD2002	MP3CD03
1	+5V	+5V
2	GND	GND
3	CD_IIS_DATA	CD_IIS_DATA
4	AU_IIS_DATA	AU_IIS_DATA
5	IIS_WCLK	IIS_WCLK
6	GND	GND
7	IIS_SCLK	IIS_SCLK
8	GND	STATUS
9	CD10_SDA	CD18_SDA
10	CD10_SICL	CD18_SICL
11	CD10_RAB	CD18_RAB
12	CD10_SILD	CD18_SILD
13	CD10_RESET	CD18_RESETn
14	SPDIF	SPDIF
15	SPDIF_GND	SPDIF_GND
16	uP_FRAME	DSP_FRAME
17	uP_DATA	DSP_DATA
18	uP_CLK	DSP_CLK
19	GND	GND

.... only for FLASH version
* .... only for ROM version

10-11

MP3 BOARD FOR ORIENTATION ONLY

MP3 CD03 Board **SIDE A** (flash version)

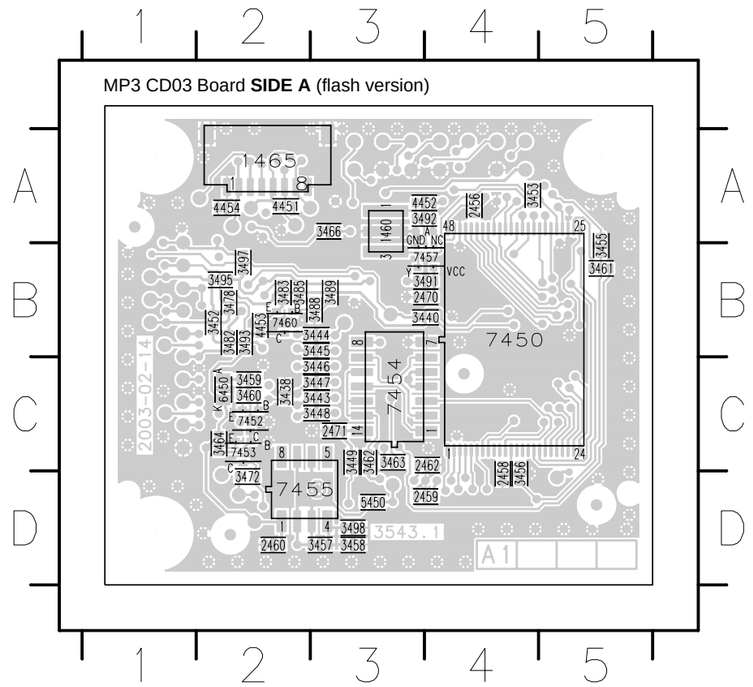

1460 A3 4452 A3
1465 A2 4453 B2
2456 A4 4454 A2
2458 D4 5450 D3
2459 D4 6450 C2
2460 D2 7450 B4
2462 C4 7452 C2
2470 B4 7453 C2
2471 C3 7454 C3
3438 C2 7455 D2
3440 B4 7457 B4
3443 C3 7460 B2
3444 B3
3445 B3
3446 C3
3447 C3
3448 C3
3452 B2
3453 A4
3455 B5
3456 D4
3457 D3
3458 D3
3459 C2
3460 C2
3461 B5
3462 C3
3463 C3
3464 C2
3466 A3
3472 D2
3478 B2
3482 B2
3483 B2
3485 B2
3488 B3
3489 B3
3491 B4
3492 A3
3493 B2
3495 B2
3497 B2
3498 D3
4451 A2

MP3 CD03 Board **SIDE B** (flash version)

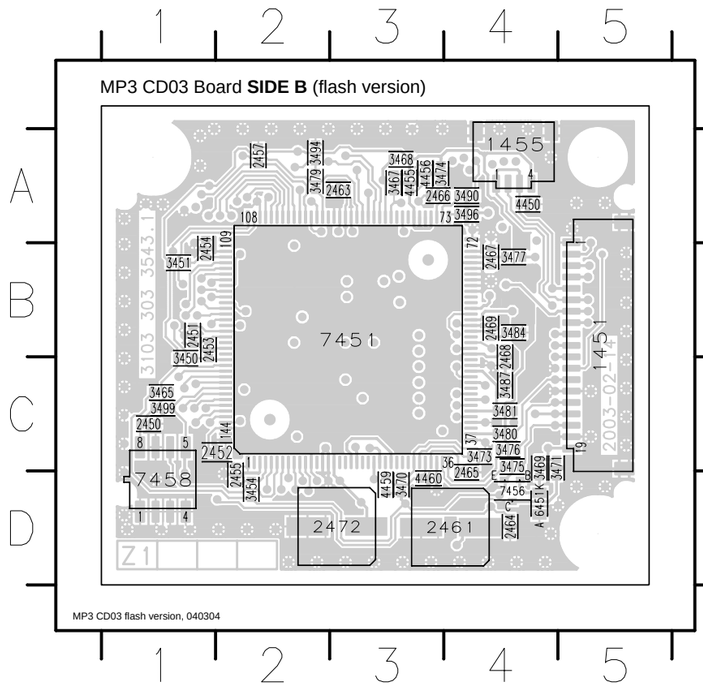

MP3 CD03 flash version, 040304

1451 B5 4459 D3
1455 A4 4460 D3
2450 C1 6451 D4
2451 B1 7451 B3
2452 C2 7456 D4
2453 B1 7458 D1
2454 B1
2455 D2
2457 A2
2461 D4
2463 A3
2464 D4
2465 D4
2466 A3
2467 B4
2468 B4
2469 B4
2472 D3
3450 C1
3451 B1
3454 D2
3465 C1
3467 A3
3468 A3
3469 C4
3470 D3
3471 C4
3473 C4
3474 A3
3475 C4
3476 C4
3477 B4
3479 A2
3480 C4
3481 C4
3484 B4
3487 C4
3490 A4
3494 A2
3496 A4
3499 C1
4450 A4
4455 A3
4456 A3

1460 B3 3456 B1 3464 C3 3486 C2 3494 A1 5450 D3 7456 C2
2459 D4 3457 D2 3466 A2 3488 C1 3495 A2 6450 C3 7460 C2
2460 D2 3458 D2 3469 C2 3489 C2 3497 B2 6451 D2
2462 D3 3459 C3 3471 D2 3491 B1 3498 D2 7452 C3
2464 C3 3460 C3 3478 B2 3492 B3 4451 C1 7453 C3
3453 B1 3461 C2 3485 C2 3493 C2 4453 C2 7455 D3

MP3 CD2002/CD03 Board **SIDE A** (mask version)

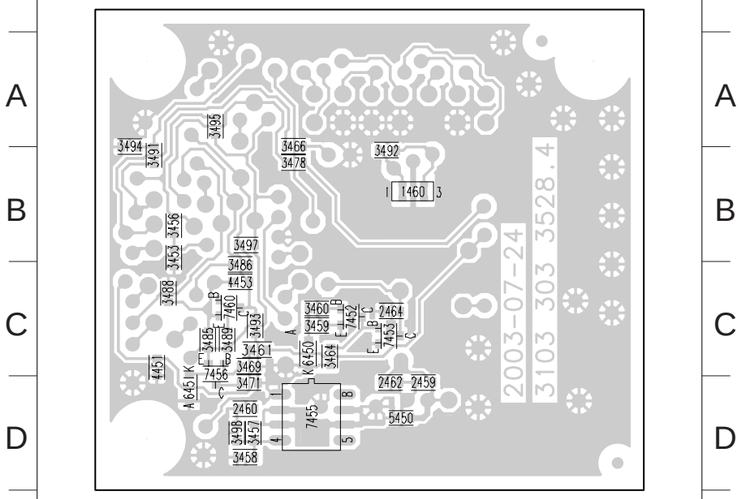

This assembly drawing shows a summary of all possible versions.
For components used in a specific version see schematic diagram
respectively partslist.

1451 B5 2454 B2 2465 D4 3450 C1 3467 A3 3475 D4 3483 C4 4450 A5
1455 A4 2455 D2 2466 A4 3451 B2 3468 A3 3476 D4 3484 B4 7451 B3
2450 C1 2457 A2 2467 B4 3452 C4 3470 D4 3477 B4 3487 C4 7458 D1
2451 B2 2458 A3 2468 C4 3454 D2 3472 A2 3479 A2 3490 B4
2452 C2 2461 D3 2469 B4 3455 A2 3473 D4 3481 C4 3496 B4
2453 C1 2463 A3 2472 D2 3465 C1 3474 A4 3482 B4 3499 C1

MP3 CD2002/CD03 Board **SIDE B** (mask version)

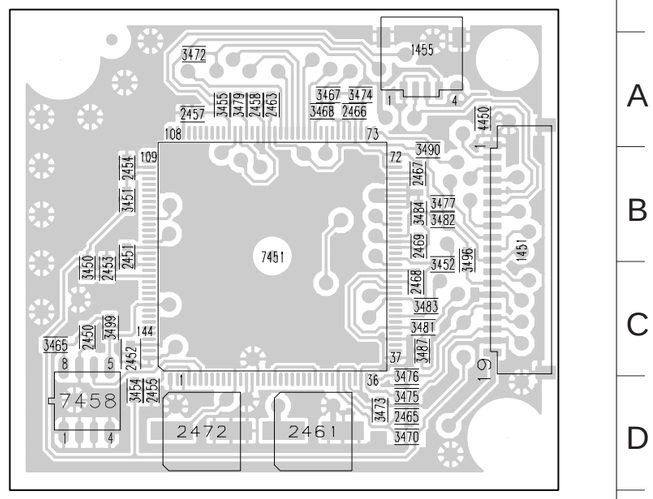

This assembly drawing shows a summary of all possible versions.
For components used in a specific version see schematic diagram
respectively partslist.

MP3 CD2002 stage .4, 050304

10-12

Exploded view 5DTC mechanic - for orientation only

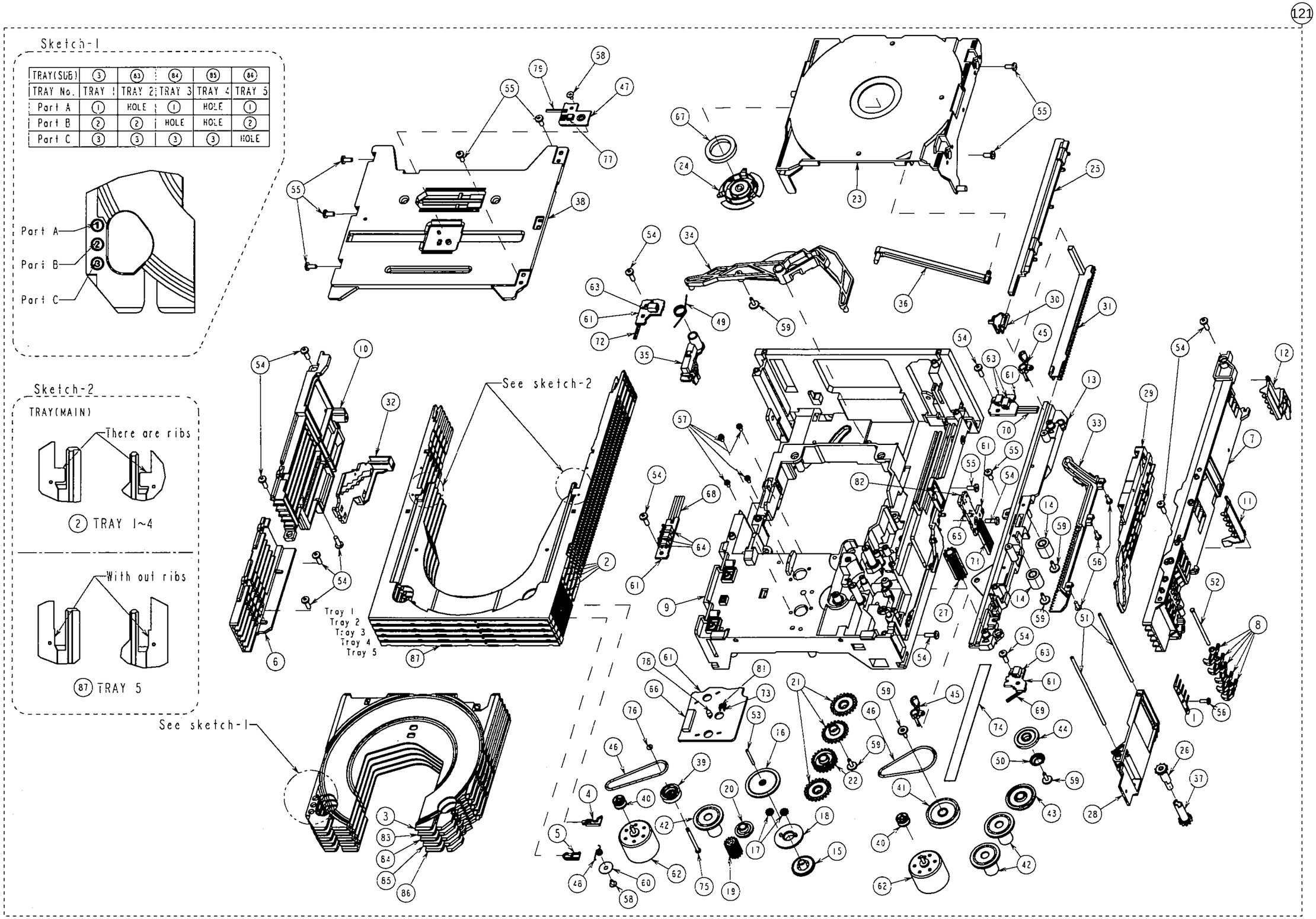

PARTSLIST 5DTC MODULE MP3CD Version

MECHANICAL PARTS

121	**3103 308 54710**	**5DTC Module** (mechanic w/o electronic)
201	3103 309 05390	CD DRIVE DA12T3
252	4822 529 10387	Rubber damper CD DRIVE, FRONT
253	4822 529 10386	Rubber damper CD DRIVE, REAR

MISCELLANEOUS

1001	**3103 308 66981**	**CD BOARD (complete assy)**
1021	**3103 308 66951**	**CONTROL BOARD (complete assy)**
1051	**3103 308 67031**	**MP3 BOARD (complete assy)**
1800	4822 267 11028	FFC-CONNECTOR 16P, Side entry
1820	2422 025 17303	FFC-CONNECTOR 19P, Side entry
1823	2422 025 16371	FFC-CONNECTOR 8P, Side entry
1824	4822 265 10979	FFC-CONNECTOR, 15P, Side entry
8001	3103 308 93090	FFC CABLE 16Pin 80mm BD
8051	3103 308 93100	FFC-CABLE 19Pin 90mm AD
8052	3103 308 93120	FFC CABLE 8Pin 80mm BD

ELECTRICAL PARTSLIST CD BOARD MP3CD Version

MISCELLANEOUS

1001	**3103 308 66981**	**CD BOARD (complete assy)**

CAPACITORS

2812		4822 124 11947	10µF	20%	16V
2813	©	4822 126 13193	4,7nF	10%	63V
2814	©	5322 126 11579	3,3nF	10%	63V
2815	©	2020 552 94427	100pF	5%	50V
2816	©	3198 017 42230	22nF	10%	50V
2817		4822 124 22726	4,7µF	20%	35V
2818	©	3198 024 44730	47nF	5%	50V
2821	©	2238 586 59812	100nF	10%	50V
2822	©	4822 126 13344	1,5nF	5%	63V
2823		4822 124 42383	220µF	20%	4V
2824	©	4822 126 14043	1µF	20%	16V
2825	©	4822 126 13344	1,5nF	5%	63V
2826	©	3198 017 34730	47nF	10%	16V
2827	©	5322 126 11578	1nF	10%	63V
2828	©	4822 126 11669	27pF	10%	50V
2829	©	3198 017 34730	47nF	10%	16V
2830		4822 124 81286	47µF	20%	16V
2831		4822 124 81286	47µF	20%	16V
2832	©	3198 017 31530	15nF	10%	50V
2833	©	5322 126 11583	10nF	10%	63V
2834	©	3198 017 31530	15nF	10%	50V
2835	©	5322 126 11583	10nF	10%	63V
2836		4822 124 40433	47µF	20%	25V
2837	©	3198 017 34730	47nF	10%	16V
2838	©	3198 017 44740	470nF	20%	10V
2839	©	2238 586 59812	100nF	10%	50V
2840	©	4822 126 14549	33nF	10%	16V
2841	©	2238 586 59812	100nF	10%	50V
2843	©	2020 552 94427	100pF	5%	50V
2844	©	5322 122 33861	120pF	5%	NP0
2845	©	5322 122 33861	120pF	5%	NP0
2846		4822 124 40248	10µF	20%	63V
2847	©	3198 017 41050	1µF	20%	10V
2848	©	2020 552 94427	100pF	5%	50V
2849	©	5322 122 33861	120pF	5%	NP0
2850	©	5322 122 33861	120pF	5%	NP0
2851		4822 124 40248	10µF	20%	63V
2852	©	4822 126 14549	33nF	10%	16V
2853	©	5322 126 11583	10nF	10%	63V
2854		4822 124 12245	220µF	20%	16V

ELECTRICAL PARTSLIST CD BOARD MP3CD Version

CAPACITORS

2855		4822 124 11912	220µF	20%	6,3V
2860	©	4822 122 33753	150pF	5%	50
2861	©	4822 122 33753	150pF	5%	50V
2863	©	4822 126 14508	180pF	5%	50V
2864	©	4822 126 14508	180pF	5%	50V
2865	©	4822 126 14508	180pF	5%	50V
2866	©	4822 126 14508	180pF	5%	50V
2869	©	3198 017 34730	47nF	10%	16V
2870	©	4822 126 13883	220pF	5%	50V
2871	©	4822 126 13883	220pF	5%	50V
2872	©	4822 126 13883	220pF	5%	50V
2873	©	4822 126 13883	220pF	5%	50V
2874	©	4822 126 13883	220pF	5%	50V
2875	©	4822 126 13883	220pF	5%	50V
2876	©	3198 017 44740	470nF	20%	10V
2877		4822 124 40433	47µF	20%	25V
2878	©	2238 586 59812	100nF	10%	50V
2879	©	5322 126 11578	1nF	10%	63V
2880	©	2222 867 15339	33pF	5%	50V
2881	©	4822 126 14249	560pF	10%	50V
2882	©	4822 126 14226	82pF		50V
2883	©	3198 017 44740	470nF	20%	10V
2884	©	3198 017 44740	470nF	20%	10V
2885		4822 124 40196	220µF	20%	16V
2886	©	2238 586 59812	100nF	10%	50V
2887	©	3198 017 34730	47nF	10%	16V

RESISTORS

3801	©	4822 051 30393	39kΩ	5%	0,06W
3802	©	4822 051 30393	39kΩ	5%	0,06W
3803	©	4822 117 12925	47kΩ	1%	0,06W
3804	©	4822 117 12925	47kΩ	1%	0,06W
3805	©	4822 117 12925	47kΩ	1%	0,06W
3806	©	4822 117 12925	47kΩ	1%	0,06W
3807	©	4822 051 30103	10kΩ	5%	0,06W
3808	©	4822 051 30103	10kΩ	5%	0,06W
3809	©	4822 051 30103	10kΩ	5%	0,06W
3810	©	4822 051 30103	10kΩ	5%	0,06W
3811	©	4822 051 30103	10kΩ	5%	0,06W
3812	©	4822 051 30103	10kΩ	5%	0,06W
3813	©	4822 051 30222	2,2kΩ	5%	0,06W
3814	©	4822 051 30222	2,2kΩ	5%	0,06W
3815	©	4822 051 30222	2,2kΩ	5%	0,06W
3816	©	4822 051 30222	2,2kΩ	5%	0,06W
3817	©	4822 051 30479	47Ω	5%	0,06W
3818	©	4822 051 30479	47Ω	5%	0,06W
3819	©	4822 051 30479	47Ω	5%	0,06W
3820	⚠	4822 052 10478	4,7Ω	5%	NFR25
3821	©	4822 117 12917	1Ω	5%	0,06W
3822	©	4822 051 30103	10kΩ	5%	0,06W
3823	©	4822 051 30102	1kΩ	5%	0,06W
3824	©	4822 051 30474	470kΩ	5%	0,06W
3825	©	5322 117 13029	47kΩ	1%	0,06W
3826	©	4822 117 12891	220kΩ	1%	0,06W
3827	©	5322 117 13056	8,2kΩ	1%	0,06W
3828	©	5322 117 13052	2,7kΩ	1%	0,06W
3829	©	4822 051 30121	120Ω	5%	0,06W
3831	©	4822 051 30471	470Ω	5%	0,06W
3832	©	4822 051 30471	470Ω	5%	0,06W
3833	©	4822 051 30121	120Ω	5%	0,06W
3834	©	4822 051 30472	4,7kΩ	5%	0,06W
3836	©	4822 117 13632	100kΩ	1%	0,06W
3837	©	4822 051 30471	470Ω	5%	0,06W

10-13

ELECTRICAL PARTSLIST 5DTC MODULE CD BOARD MP3CD Version

RESISTORS

3839	©	4822 051 30471	470Ω	5%	0,06W
3840	©	4822 051 30223	22kΩ	5%	0,06W
3841	©	4822 051 30153	15kΩ	5%	0,06W
3842	©	4822 051 30102	1kΩ	5%	0,06W
3843	©	4822 051 30102	1kΩ	5%	0,06W
3844	©	4822 051 30101	100Ω	5%	0,06W
3845	©	4822 051 30471	470Ω	5%	0,06W
3846	©	4822 051 30102	1kΩ	5%	0,06W
3847	©	4822 117 12968	820Ω	5%	0,06W
3848	©	4822 051 30221	220Ω	5%	0,06W
3849	©	4822 051 30471	470Ω	5%	0,06W
3850	©	4822 117 12925	47kΩ	1%	0,06W
3851	©	4822 117 12968	820Ω	5%	0,06W
3852	©	4822 051 30221	220Ω	5%	0,06W
3854	©	4822 117 12925	47kΩ	1%	0,06W
3855	©	4822 051 30393	39kΩ	5%	0,06W
3856	©	4822 051 30272	2,7kΩ	5%	0,06W
3857	©	4822 051 30008	CHIP JUMPER 0603		
3859	©	4822 117 13632	100kΩ	1%	0,06W
3860	©	4822 051 30123	12kΩ	5%	0,06W
3861	©	4822 051 30153	15kΩ	5%	0,06W
3862	©	4822 051 30393	39kΩ	5%	0,06W
3864	©	4822 051 30333	33kΩ	5%	0,06W
3865	©	4822 051 30181	180Ω	5%	0,06W
3866	©	4822 117 13608	4,7Ω	5%	0,06W
3867	©	4822 051 30333	33kΩ	5%	0,06W
3868	©	4822 051 30183	18kΩ	5%	0,06W
3869	©	4822 051 30183	18kΩ	5%	0,06W
3870	©	4822 051 30681	680Ω	5%	0,06W
3871	©	4822 051 30181	180Ω	5%	0,06W
3872	©	4822 051 30272	2,7kΩ	5%	0,06W
3873	©	4822 051 30333	33kΩ	5%	0,06W
3874	©	4822 051 30333	33kΩ	5%	0,06W
3875	©	4822 051 30183	18kΩ	5%	0,06W
3876	©	4822 051 30183	18kΩ	5%	0,06W
3877	©	4822 051 30681	680Ω	5%	0,06W
3878	©	4822 051 30471	470Ω	5%	0,06W
3879	©	4822 051 30223	22kΩ	5%	0,06W
3880	©	4822 051 30339	33Ω	5%	0,06W
3881	©	4822 051 30151	150Ω	5%	0,06W
3883	©	4822 051 30472	4,7kΩ	5%	0,06W
3884	©	4822 051 30472	4,7kΩ	5%	0,06W
3888	©	4822 051 30103	10kΩ	5%	0,06W
3889	©	4822 051 30471	470Ω	5%	0,06W
3890	©	4822 051 30471	470Ω	5%	0,06W
3891	©	4822 051 30102	1kΩ	5%	0,06W
3892	©	4822 051 30102	1kΩ	5%	0,06W
3893	©	4822 051 30471	470Ω	5%	0,06W
3895	©	4822 051 30273	27kΩ	5%	0,06W
3896	©	4822 051 30101	100Ω	5%	0,06W
3897	©	4822 051 30333	33kΩ	5%	0,06W
3898	©	4822 051 30221	220Ω	5%	0,06W
3899	©	4822 051 30272	2,7kΩ	5%	0,06W
3901	©	4822 051 30561	560Ω	5%	0,06W
3902	©	4822 117 11139	1,5kΩ	1%	0,1W
3903	©	4822 051 30332	3,3kΩ	5%	0,06W
3904	©	4822 051 30332	3,3kΩ	5%	0,06W
3905	©	4822 051 30681	680Ω	5%	0,06W
3906	©	4822 051 30471	470Ω	5%	0,06W
3907	©	4822 117 12968	820Ω	5%	0,06W
3908	©	4822 051 30222	2,2kΩ	5%	0,06W
3909	©	4822 117 13632	100kΩ	1%	0,06W
3910	©	4822 051 30471	470Ω	5%	0,06W

RESISTORS

3912	©	4822 051 30221	220Ω	5%	0,06W
3916	©	4822 051 30471	470Ω	5%	0,06W
3917	©	4822 117 13608	4,7Ω	5%	0,06W
3918	©	4822 051 30103	10kΩ	5%	0,06W
3919	©	4822 051 30153	15kΩ	5%	0,06W
3920	©	4822 051 30101	100Ω	5%	0,06W
3923	©	4822 051 30103	10kΩ	5%	0,06W
3925	©	4822 051 30101	100Ω	5%	0,06W
3926	©	4822 051 30101	100Ω	5%	0,06W
3927	©	4822 051 30101	100Ω	5%	0,06W
3928	©	4822 051 30101	100Ω	5%	0,06W
4807	©	4822 051 30008	CHIP JUMPER 0603		
4809	©	4822 051 30008	CHIP JUMPER 0603		
4820	©	4822 051 30008	CHIP JUMPER 0603		
4824	©	4822 051 30008	CHIP JUMPER 0603		
4835	©	4822 051 20008	CHIP JUMPER 0805		
4836	©	4822 051 20008	CHIP JUMPER 0805		
4837	©	4822 051 20008	CHIP JUMPER 0805		
4838	©	4822 051 20008	CHIP JUMPER 0805		
4840	©	4822 051 20008	CHIP JUMPER 0805		
4841	©	4822 051 20008	CHIP JUMPER 0805		
4843	©	4822 051 20008	CHIP JUMPER 0805		

COILS

1810	2422 540 98519	RESONATOR 8,467MHz
5001 ©	2422 549 44607	FERRITE BEAD
5002 ©	2422 549 44607	FERRITE BEAD

DIODES

6877 ©	9322 129 34685	BZX284-C3V9

TRANSISTORS

7875 ©	5322 130 42755	BC847C
7876 ©	5322 130 42755	BC847C
7877 ©	5322 130 42755	BC847C
7878 ©	5322 130 42755	BC847C
7879 ©	5322 130 60123	BC807-40

INTEGRATED CIRCUITS

7800 ©	9352 684 20557	SAA7325H/T/M2B, Signal Processor
7801	4822 209 72554	MC7808CT 8V Regulator
7802 ©	9322 181 79668	MM1469PH Motor Driver
7810 ©	5322 209 82941	LM358D, Dual Opamp
7811 ©	5322 209 82941	LM358D, Dual Opamp

Note:
Components printed in grey colour are considered as standard spareparts and thus not available on service stock.
Code numbers are published for orientation only.

10-14

ELECTRICAL PARTSLIST 5DTC MODULE CONTROL BOARD

MISCELLANEOUS

1021	**3103 308 66951**	**CONTROL BOARD (complete assy)**	
1801	2422 025 17065	FFC-CONNECTOR 16P, top entry	
1802	2422 025 17788	FFC-CONNECTOR 8P, top entry	
8021	3103 308 93110	FFC-CABLE 16Pin 60mm AD	

CAPACITORS

2800 ©	4822 126 13879	220nF	20%	16V	
2801 ©	2238 586 59812	100nF	10%	50V	
2802 ©	2238 586 59812	100nF	10%	50V	
2803 ©	2238 586 59812	100nF	10%	50V	
2808	4822 124 40433	47µF	20%	25V	
2810 ©	3198 017 34730	47nF	10%	16V	
2811 ©	2238 586 59812	100nF	10%	50V	
2812 ©	2238 586 59812	100nF	10%	50V	
2813 ©	2238 586 59812	100nF	10%	50V	
2814 ©	2238 586 59812	100nF	10%	50V	

RESISTORS

3800 ©	4822 051 30472	4,7kΩ	5%	0,06W
3801 ©	4822 051 30472	4,7kΩ	5%	0,06W
3802 ©	4822 051 30472	4,7kΩ	5%	0,06W
3803 ©	4822 051 30472	4,7kΩ	5%	0,06W
3804 ©	4822 051 30472	4,7kΩ	5%	0,06W
3805 ©	4822 051 30472	4,7kΩ	5%	0,06W
3806 ©	4822 051 30472	4,7kΩ	5%	0,06W
3807 ©	4822 051 30472	4,7kΩ	5%	0,06W
3808 ©	4822 051 30472	4,7kΩ	5%	0,06W
3809 ©	4822 051 30472	4,7kΩ	5%	0,06W
3810 ©	4822 051 30103	10kΩ	5%	0,06W
3811 ©	4822 051 30154	150kΩ	5%	0,0625W
3815 ©	5322 117 13057	820Ω	1%	0,06W
3816 ©	4822 051 30479	47Ω	5%	0,06W
3818 ©	4822 051 30479	47Ω	5%	0,06W
3819 ©	5322 117 13057	820Ω	1%	0,06W
3820 ©	5322 117 13057	820Ω	1%	0,06W
3821 ©	4822 051 30479	47Ω	5%	0,06W
3823 ©	4822 051 30479	47Ω	5%	0,06W
3824 ©	5322 117 13057	820Ω	1%	0,06W
3826 ▲	4822 117 12148	1,5Ω	5%	0,33W
3827 ©	4822 051 30101	100Ω	5%	0,06W
3828 ©	4822 051 30101	100Ω	5%	0,06W
3829 ©	4822 051 30101	100Ω	5%	0,06W
3830 ©	4822 051 30103	10kΩ	5%	0,06W
3831 ©	4822 051 30103	10kΩ	5%	0,06W
3832 ©	4822 051 30272	2,7kΩ	5%	0,06W
3833 ©	4822 051 30272	2,7kΩ	5%	0,06W
3834 ©	4822 051 30272	2,7kΩ	5%	0,06W
3835 ©	4822 051 30272	2,7kΩ	5%	0,06W
3836 ©	4822 051 30272	2,7kΩ	5%	0,06W
3837 ©	4822 051 30272	2,7kΩ	5%	0,06W
3838 ©	4822 051 30333	33kΩ	5%	0,06W
3839 ©	4822 051 30272	2,7kΩ	5%	0,06W
3840 ©	4822 051 30272	2,7kΩ	5%	0,06W
3841 ©	4822 051 30103	10kΩ	5%	0,06W
3842 ©	4822 051 30103	10kΩ	5%	0,06W
3845 ©	4822 051 20159	15Ω	5%	0,1W
3850 ©	4822 117 12706	10kΩ	1%	0,06W
3851 ©	4822 117 12706	10kΩ	1%	0,06W
3852 ©	4822 117 12706	10kΩ	1%	0,06W
3853 ©	4822 117 12706	10kΩ	1%	0,06W
3854 ©	4822 117 12706	10kΩ	1%	0,06W
3855 ©	4822 117 12706	10kΩ	1%	0,06W
3856 ©	4822 117 12706	10kΩ	1%	0,06W
3857 ©	4822 117 12706	10kΩ	1%	0,06W
3858 ©	4822 051 30102	1kΩ	5%	0,06W
3859 ©	4822 051 30103	10kΩ	5%	0,06W
3860 ©	5322 117 13017	100Ω	1%	0,06W
3861 ©	2322 704 62002	2kΩ	1%	0,06W
3862 ©	4822 117 12706	10kΩ	1%	0,06W
3863 ▲	4822 053 10228	2,2Ω	5%	1W
4800 ©	4822 051 30008	CHIP JUMPER 0603		
4802 ©	4822 051 30008	CHIP JUMPER 0603		
4803 ©	4822 051 30008	CHIP JUMPER 0603		
4804 ©	4822 051 30008	CHIP JUMPER 0603		
4805 ©	4822 051 20008	CHIP JUMPER 0805		
4806 ©	4822 051 30008	CHIP JUMPER 0603		
4807 ©	4822 051 30008	CHIP JUMPER 0603		
4808 ©	4822 051 30008	CHIP JUMPER 0603		
4809 ©	4822 051 20008	CHIP JUMPER 0805		
4810 ©	4822 051 20008	CHIP JUMPER 0805		
4811 ©	4822 051 30008	CHIP JUMPER 0603		
4812 ©	4822 051 30008	CHIP JUMPER 0603		
4813 ©	4822 051 30008	CHIP JUMPER 0603		
4814 ©	4822 051 30008	CHIP JUMPER 0603		
4816 ©	4822 051 20008	CHIP JUMPER 0805		
4817 ©	4822 051 20008	CHIP JUMPER 0805		
4818 ©	4822 051 20008	CHIP JUMPER 0805		
4819 ©	4822 051 30008	CHIP JUMPER 0603		
4820 ©	4822 051 30008	CHIP JUMPER 0603		
4821 ©	4822 051 20008	CHIP JUMPER 0805		
4822 ©	4822 051 20008	CHIP JUMPER 0805		

COILS

1800	2422 540 98518	CERAMIC FILTER 8,0MHz

TRANSISTORS

7806 ©	3198 010 42320	BC857BW

INTEGRATED CIRCUITS

7800	4822 209 72042	MC78L05ACP, STABILIZER
7801 ©	3103 307 01761	TMP87P809M Mask2, Microcontroller
7803	4822 209 62059	TCA0372DP1, 2-FOLD OP-AMP.
7805	4822 209 62059	TCA0372DP1, 2-FOLD OP-AMP.

Note:
Components printed in grey colour are considered as standard spareparts and thus not available on service stock.
Code numbers are published for orientation only.

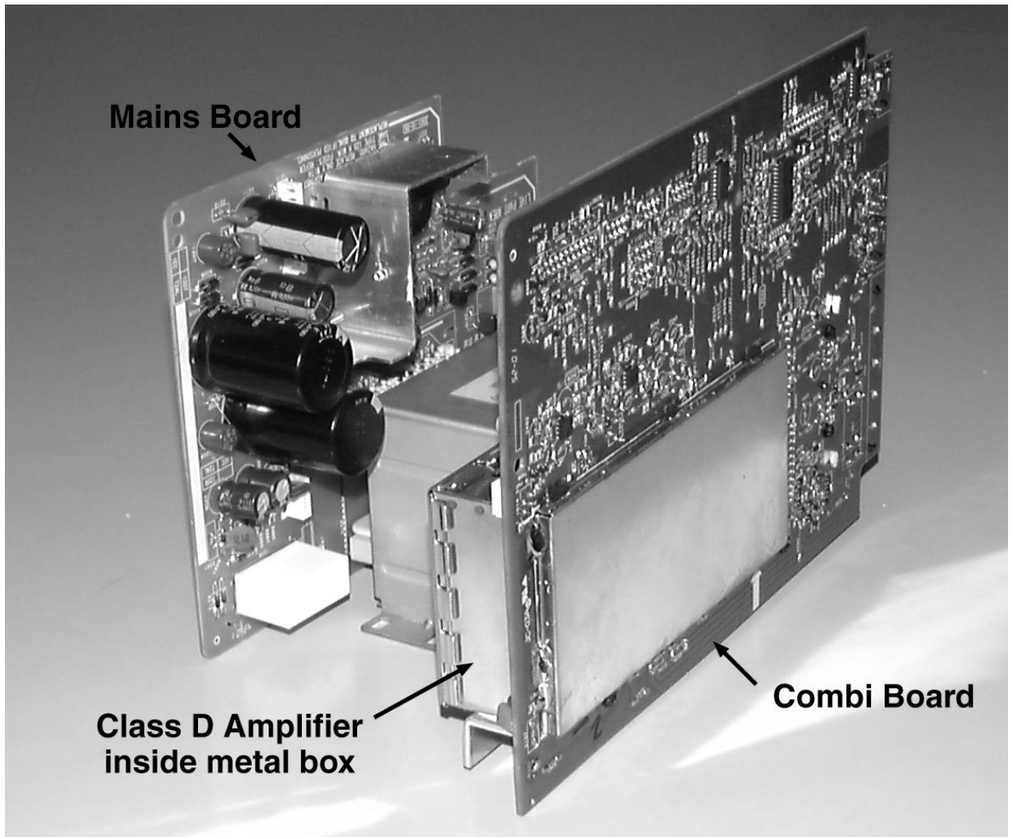

Power 2003 Module

(75 - 150W Class D)

stage M.6/C.4 update 2

TABLE OF CONTENTS

Brief Circuit Description....11-1
Service Hints....11-2

COMBI BOARD
Circuit Diagram
Overview....11-4
Source Selector part....11-5
Audio Frequency & Logic part....11-6
Oscillator & Pre-Amplifier part....11-7
Amplifier part Left Channel....11-8
Amplifier part Right Channel....11-9

Component Layout
Componentside view....11-10
Copperside view....11-11

MAINS BOARD
Component Layout....11-12
Circuit Diagram....11-13

Partslist....11-14

Class-D Circuit Description (BASED ON POWER 2003 MODULE 75-150W CLASS D)

Basically Class-D works by transforming the LF audio input to a square wave signal with a fixed frequency and a variable duty cycle. See simplified drawing below.

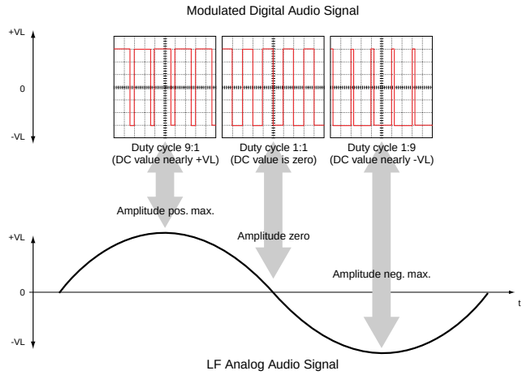

The amplitude of the square wave signal is equal to the supply voltage of the amplifier. With the audio signal the square wave signal is pulse-width modulated.

Compared to a conventional power amplfier the benefits of the Class D amplifier are:
- higher effiency
- lower power dissipation
- smaller cooling fin
- smaller mains transformer

Disadvantage of this concept is:
- 500kHz square wave signal with high current requires a shielding box to suppress radiation.

Required Circuitries:

- **500kHz square wave oscillator**.
  The oscillator frequency is created by 7312-3; it is a dual-frequency oscillator with ceramic resonators 5300 and 5302, which resonate at 500kHz and 425kHz respectively. The resonators are switched by transistors 7309 and 7316, controlled by the "OZ_SW" line from the port expander 7406.
  The reason for 2 frequencies is to avoid tuner disturbances in the AM-band.
  The oscillator signal is shaped to square wave with 7312-2, afterwards buffered and fed to the amplifier modulators (ROZ to the right channel, LOZ to the left). One channel gets inverted clock to balance supply loading.

- **Modulator**
  The modulator forms the pulse width modulated signal. For each channel a seperate modulation is required.

- **Power FETs**
  The FETs require drivers which supply the gates. One for the high-side-FET and one for the low-side-FET. Because of the different supply voltages also an additional level shifter is necessary per driver.

- **Output filter**
  The output filter is necessary to block the 500kHz square wave signal from the speaker.
  Refers to the left channel in schematic diagrams.
  It consists of a series-mode coil 5101 and a capacity of approx. 550nF (2116, 2134), which forms a Chebycheff filter with 40kHz cut-off frequency at 6Ω load. For EMC reasons both, the speaker output and the return ground are fed through a common mode coil (5102). The filter is further improved by splitting the output capacity into 2116 before and 2134 after the common mode coil.

All above mentioned circuitries are located inside the metal shielding box.

Blockdiagram Class D

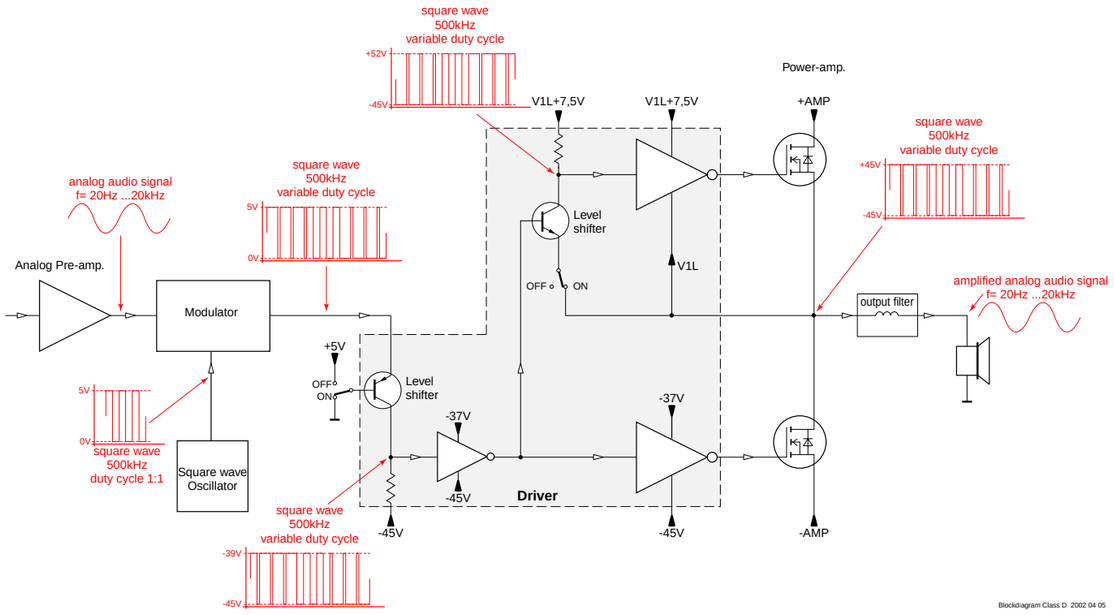

Class-D Circuit Description (Based on Power 2003 Module 75-150W Class D)

Functional Description:

Refers to the left channel in schematic diagrams.
The first stage of the modulator is an error integrator which compares the input to the (24 dB amplified) output signal of the power stage. The difference is leading to a current, which loads the integrator 7122-A. The second stage (7122-B) adds the 500kHz rectangular oscillator signal, creates high gain and low distortion and is again integrating. The output signal leads to a triangle wave form (see oscillogram Ⓔ). The DC value of this triangle signal is floating, dependent on the amplitude of the analog input signal. The next stage is a comparator, which compares the integrated voltage with the internal switching levels - thus creating a voltage controlled duty cycle. 7122 C and D improve the shape of the pulses. For details see oscillograms Ⓐ-Ⓕ.
At pin 8 of IC7122 there is a square wave with the same frequency and duty cycle as the desired output.

The next task is to feed this information to the output FETs. Both FETs are n-channel types, so they are modulated by feeding the gate in respect to the source connection. Inverters 74LV14 are used as drivers. The driver for the low-side FET (7121) is supplied by the negative supply -VL2 and a voltage +VL (generated by 7115 and 6113), which is 7.5V higher than -VL2. The digital signal is level-shifted by 7128 to the low side driver stage. 3142, 6111 and 2126 together form a delay circuit for rising edges by approx. 100ns for the low side FET. 3154, 6109 and 2137 delay the rising edge by 50ns for the high side FET. This to compensate the switch-off delay of the FETs and ensures that both FETs are not conducting at the same time.
The high-side FET (7109) is controlled by the inverted signal taken from pin 2 of 7118, which is level-shifted by transistor 7119. The driver for the high-side FET is supplied by a floating voltage between the amplifier output -V1L and +V1L, created by the charge pump 6110, 2114 regulated by 7114 and 6114 to a 7.5V higher level. The pump is additionally supplied (via 3151) by +45V to ensure supply at start-up (no signal). The last stage in the gate driver consists of three gates in parallel for increased output current for the capacitive load of the FET. For additional increase of the switching speed push/pull transistors 7132/7111 are added.

Protection Circuits:

The amplifier is protected against low load impedance (including short circuit). Current is sensed by shunts 3101, 3130 in both supplies. Overcurrent at the positive supply is then sensed by 7104, the negative supply overcurrent triggers 7117, which then also triggers 7104. The collector current in turn triggers the monoflop 7122-5 and -6, giving a "High" pulse at pin 10. This shuts off level-shifter 7128 and blocks transistor 7129 and 7131, which draws current into the emitter resistor 3134 of level-shifter 7119. It is now also shut off. So, both FETs are shut off within approx. 0,2 sec. The monoflop can be reset by:
- switching mains off and on again
- pressing Standby button and afterwards any source button
- plugging headphone in for a short moment

When a headphone is used the amplifier is shut off. This is done by pulling pin 13 of 7122 via signal line "AMP_OFF" and transistor 7130 to high level. The line "AMP_OFF" is controlled by the port expander 7406 which detects the headphone via signal line "HP_DET".

The loudspeakers are protected against DC voltages resulting e.g. from defective FETs. Voltages higher than ±2V are detected by 7110 respectively 7112. The transistors conduct and pull the "DC_PROT" line down, blocking transistor 7243 which in turn disables speaker relay 1201.

Adjustments:

The gain of the class-D amplifier is 24dB, adjusted by the feedback resistors 3155, 3136, 3149 and the input resistors 3139, 3340. The input reference voltage for 7122-A is approx. half the supply, therefore 3144, 3148 are used for offset compensation. This compensation has to be fine-tuned with trimpotentiometers 3306 and 3307 to obtain <1mV DC output.

Service Hints:

The analog part of the Combi Board can be repaired without opening the metal shielding box. In case of a 'Class D' problem it is advised to disassemble the board first, desolder the metal bottom cover of the shielding box and assemble the board again. This takes a few minutes only.

<u>To de-solder the metal bottom cover proceed as follows:</u>
1)Remove top cover of shielding box to reduce heat flow
2)Do not use de-solder wick
3)Simply hold the board upright down as shown in picture 1.
Heat up solder joints and move tip of soldering iron slowly along the edge of the metal frame.
Solder will flow along the soldering tip and rest on the metal plate. A small amount will drop off.
A small gap will become visible as indication that the solder connection is released.
When all solder joints are released the cover can be removed by help of a screwdriver. Begin at the corner indicated by an arrow → see picture 2.

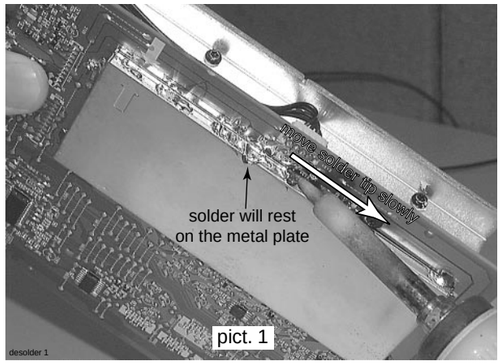

pict. 1

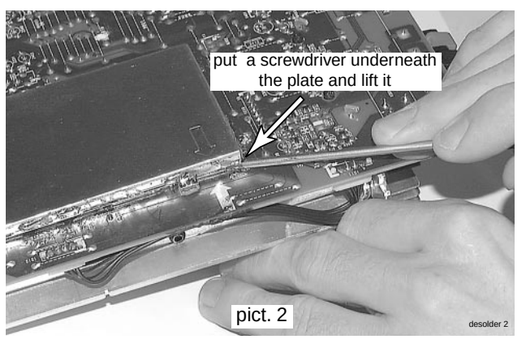

pict. 2

<u>To re-mount the metal bottom cover proceed as follows:</u>
1)The solder connections are not distributed evenly. Therefore the cover has to be mounted in that way that the arrow indicator on the cover is positioned in line with the arrow printed on the printed board → see picture 3.

Service Hints

2)Press the metal cover smoothly down until the gap between cover and printed board becomes a minimum. This is important for proper shielding.
3)Heat up the residual solder on the metal cover. The solder will flow back to the solder areas. If necessary apply additional new solder.
4)Take care that all solder joints are re-soldered again.

Attention: Poor soldering of the metal shielding box results in disturbance of the tuner.

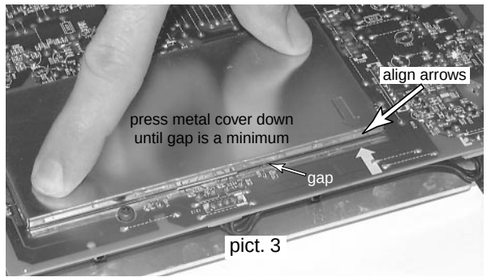

pict. 3

In most cases the FETs 7109 and/or 7121 for the left channel, respectively 7218 and/or 7231 for the right channel will be defective. This can easily be checked with an ordinary Ohm-meter.
Left Channel:
In case **7109** is defect replace following parts:
7109, 7111, 7132, 7105, 7119, 7104, 3101, 3103 and 2106

In case **7121** is defect replace following parts:
7121, 7113, 7133, 7118, 7117, 3129, 3130 and 2118

Right Channel:
In case **7218** is defect replace following parts:
7218, 7221, 7244, 7209, 7228, 7208, 3205, 3209 and 2206

In case **7231** is defect replace following parts:
7231, 7210, 7245, 7235, 7227, 3241, 3243 and 2220

Attention: Do not forget to adjust the DC-offset after replacing the FET!
If none of the FETs is defective the fault is most probably located in the modulator. To check the operation - follow the given signals.

General description of Oscilloscope setup:

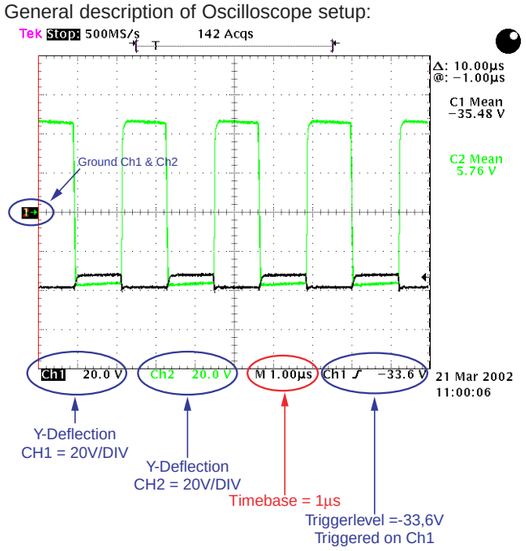

The following signals are measured on condition:
AUX in = 500mV/1kHz, Volume = -28dB
Load = 2 x 6Ω
Measuring point Ⓐ can be found on circuit diagram 3.
All other measuring points are shown on circiut diagram 4 respectively 5.
Measuring point Ⓐ: Output pre-amplifier

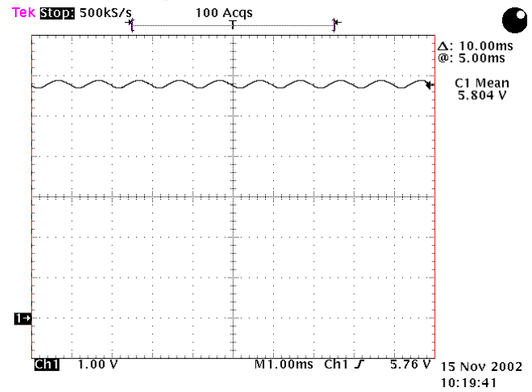

Normal analog signal measured (1kHz- Timebase 1µs). If this signal can´t be measured - the fault is outside the shielding box.

Measuring point Ⓑ: Input Modulator

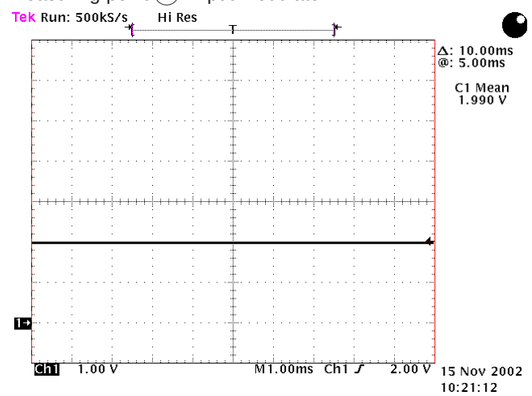

The 1kHz signal is not visible anymore. Reducing the timebase to 1µs shows the oscillogram below.

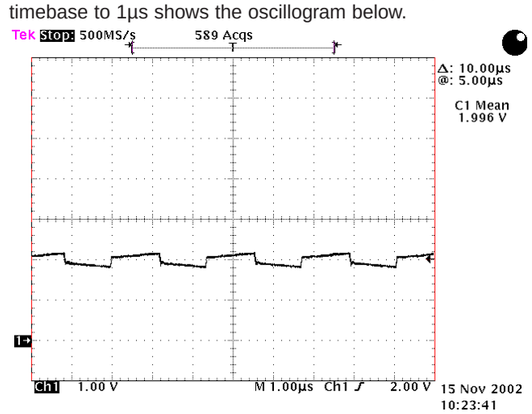

Service Hints

Measuring point Ⓒ:

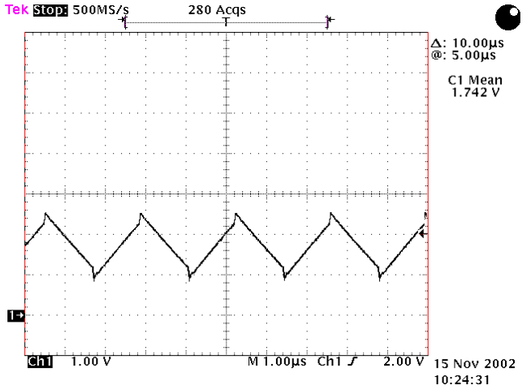

The first stage of the modulator is an integrator. An integrated rectangle results in a triangle.

Measuring point Ⓓ:

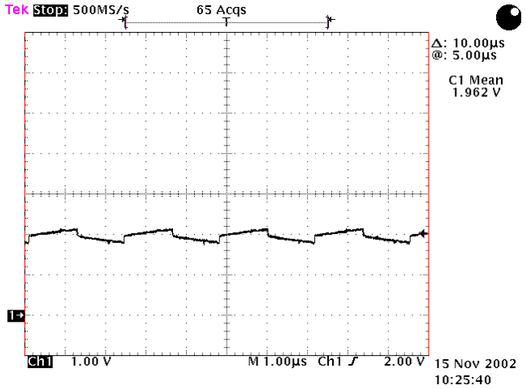

The oscillator signal (squarewave) is fed to the second integrator (7122-B).

Measuring point Ⓔ:

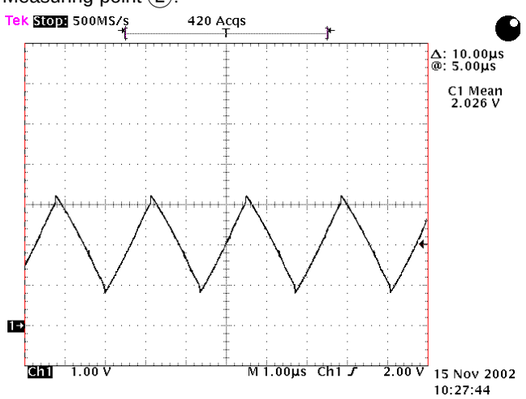

The integrated rectangle results in a triangle. 7122-C works as a comparator. 7122-D improves the shape of the pulses.

Measuring point Ⓕ: Output modulator

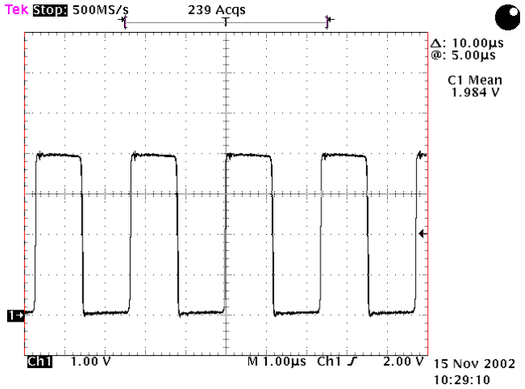

In this pulse width modulated square wave the analog Audio signal is included. Measurements with an analog scope will show a jitter on the falling edge.

The modulator frequency is still fixed to 500kHz. Similar to a frequency modulation - in this case the amplitude of the analog audio signal varies the pulse width, the frequency defines the speed.

Measuring point Ⓖ:

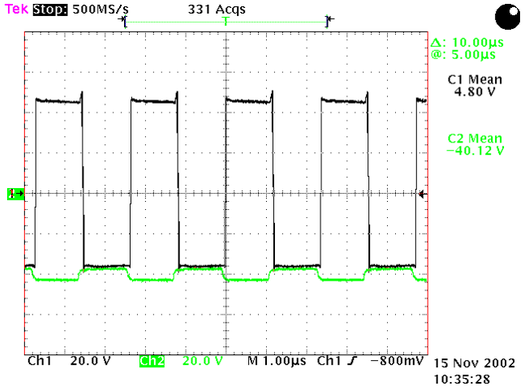

The low-side driver signal <G1> (Ch2) is the modulator output level-shifted by transistor 7128. The high-side driver signal <G2> (Ch1) is the inverted low-side driver signal level-shifted by transistor 7119.

11-3

Service Hints

Measuring point Ⓗ: gate-signal of the FETs

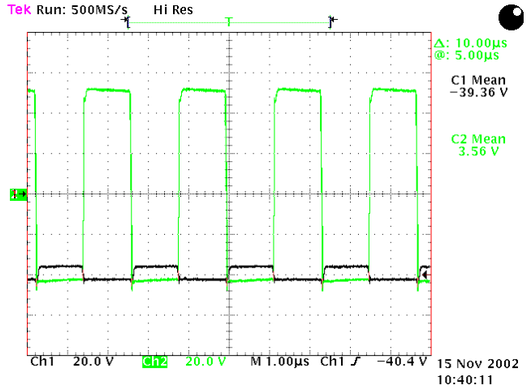

Ch1 = H1, CH2 = H2

Measuring point Ⓘ:

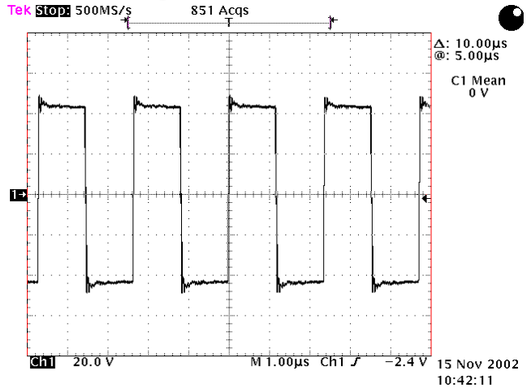

Digital output signal.

Measuring point Ⓙ:
The following three signals are measured after output filter 5101 with different timebases.

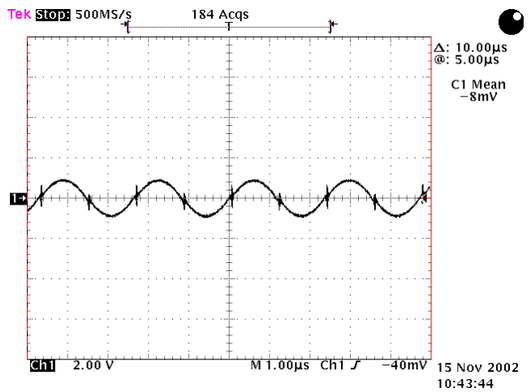

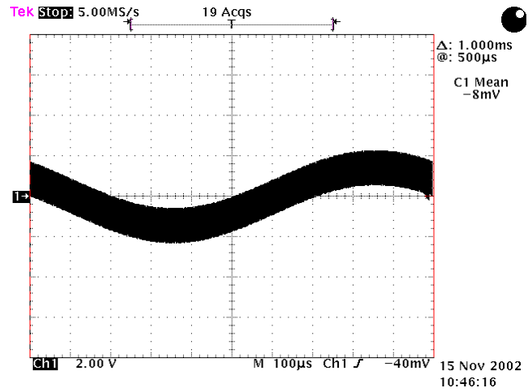

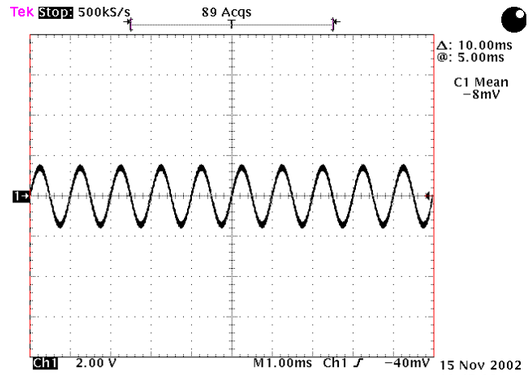

Measuring point Ⓚ:

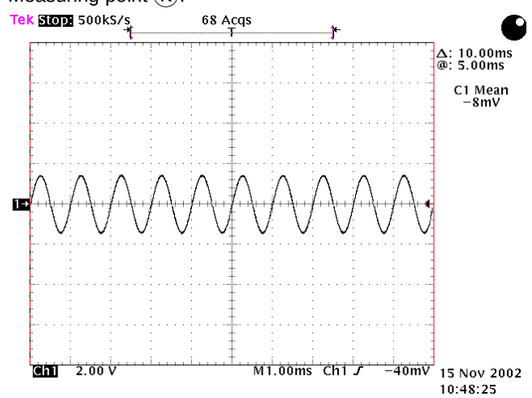

After common mode coil 5102 - the audio signal is restored.

11-4

Power 2003 75 - 150W Class D
Combi Board Circuit Diagram Overview

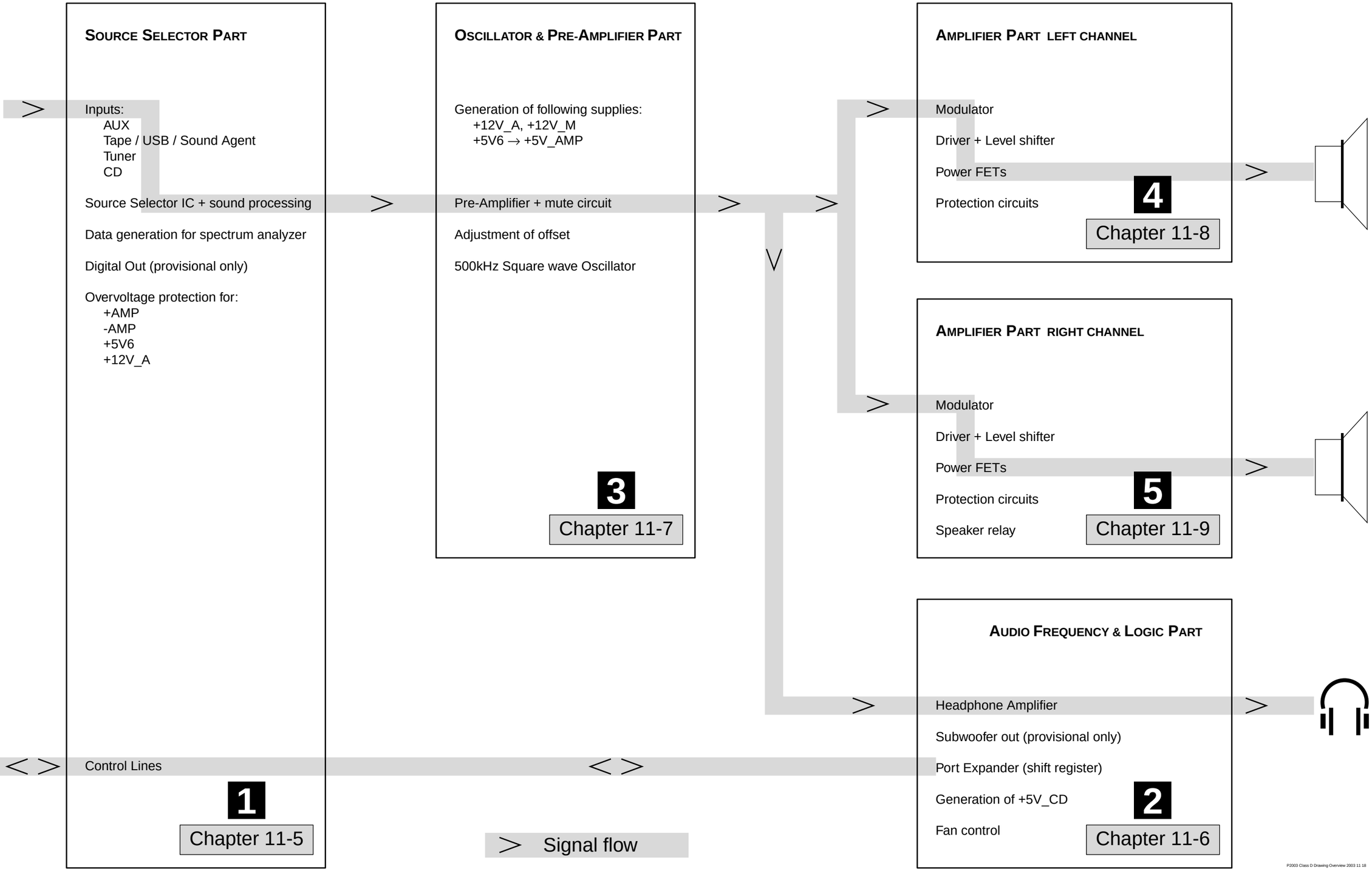

11-5

1002 A15 1005-1 A1 1005-2 A1 1006 A15 1010 B15 1011 C15 1012 G15 1013 D1 1015 F1
1018 F1 1020 D1 1022 B1 1026 E15 1027 G1 1028-A B1 1028-B A8 2500 A3 2501 A8
2519 B1 2520 A2 2526 A13 2527 A14 2528 A3 2529 A12 2531 A2 2532 A13 2533 B13
2534 B3 2535 B3 2536 B10 2537 C3 2538 B12 2539 B11 2540 C3 2541 D6 2542 D7
2543 D8 2546 D8 2547 D10 2550 D8 2551 D9 2552 E9 2553 E3 2554 D10 2555 E6
2556 E3 2557 F3 2558 F11 2559 F3 2560 G4 2561 G5 2562 G5 2563 G5 2564 G5
2565 G5 2566 G6 2567 G6 2568 G13 2569 H8 2570 G10 2571 G11 2572 H9 2574 H9
2576 H8 2577 H7 2578 H7 2579 H10 2581 D13 2582 D13 2583 G8 2584 D8 2585 F6
2586 A5 2587 A7 2588 A7 2589 A6 2590 B6 2591 A7 2592 A7 2593 H9 3500 A2
3501 C3 3502 C3 3504 A2 3506 E12 3507 E12 3508 F2 3509 F2 3510 F3 3511 F3
3514 A3 3515 A13 3517 A14 3518 A2 3519 A2 3520 A3 3521 A11 3522 B2 3523 B2
3524 A10 3525 B3 3526 B10 3527 B3 3528 B11 3529 B9 3530 B13 3531 B9 3532 B10
3533 C2 3534 C5 3535 C8 3536 C8 3539 D9 3542 D7 3543 D9 3544 D10 3545 D3
3549 E6 3550 D3 3551 E10 3552 F6 3553 F6 3554 F6 3555 F13 3556 F13 3557 F6
3558 F13 3559 F14 3560 F6 3561 G12 3562 G13 3563 G6 3564 G6 3566 G11
3567 H8 3569 G6 3570 G13 3571 H8 3572 H10 3573 G11 3574 H6 3575 H8 3576 H7
3577 H8 3578 H9 3579 H10 3580 D8 3581 G7 3582 B7 3583 A6 3584 A6 3585 A7
3586 B6 3587 A5 3588 B5 3589 B7 3591 F12 5500 A13 6500 C3 6501 C5 6502 F14
6503 G13 6504 G13 6505 G12 6506 E13 6507 F12 6508 D13 7500-1 A12 7500-2 A12
7500-3 B12 7500-4 B12 7500-5 B11 7500-6 A11 7510 A6 7511 A6 7512 A6
7500-4 B12 7500-5 B11 7500-6 A11 7505 B10 7506 E12 7508 E7 7509 G14 7511 A6
7512 A5 7020 A1 7021 A2 7023 B1 7024 B2 7025 C1 7026 C2 7027 C1
F028 C2 F029 C1 F031 D2 F032 D2 F033 D2 F034 E2 F035 E2 F036 E2 F037 E2
F038 E2 F039 F2 F040 F2 F041 F2 F042 F2 F043 F2 F044 F2 F045 F2 F046 F2
F047 F2 F048 F2 F049 F2 F050 F2 F051 G2 F052 G2 F053 G2 F058 B12 F059 B14
F060 B15 F061 C15 F062 C15 F063 C15 F064 C15 F065 D15 F066 D15 F067 D15
F068 D15 F069 D15 F070 D15 F071 E15 F072 E15 F073 E15 F074 H15 F075 E15
F076 E15 F077 D1 F078 E11 F079 F10 F080 G11 F082 E6 F083 H7 F088 B10
F089 B13 F090 A14 F091 A14 F092 A14

1 COMBI BOARD
SOURCE SELECTOR

* VARIANT-TABLE

POS.NR	67781 150W	67841 75W SA	67941 75W TAPE
3510	6k8	6k8	22k
3511	6k8	6k8	22k
3536	22k	22k	1k
3571	22k	22k	1k

SA stands fror **S**ound **A**gent

EVM (V) ...V DC voltages measured in Tuner mode

ECO Standby mode

Combi board P2003 150W class D, 30.06.04

11-6

2 COMBI BOARD
AUDIO FREQUENCY & LOGIC

HEADPHONE AMPLIFIER

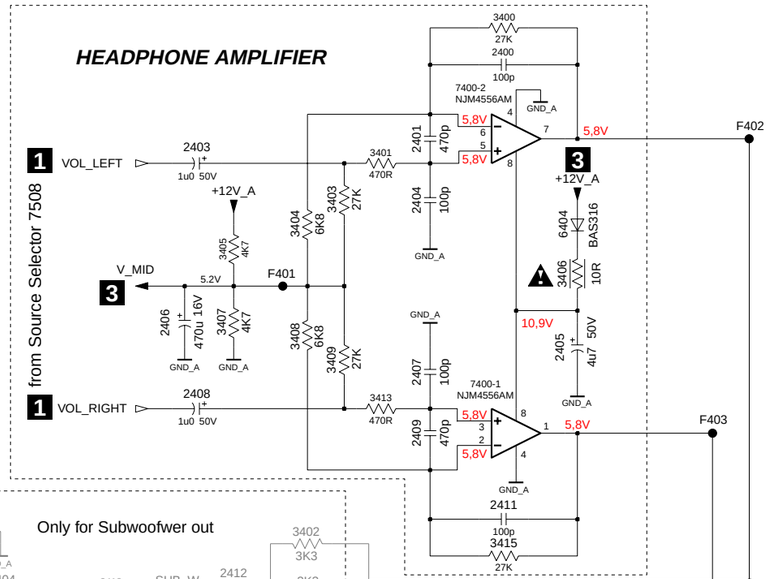

FAN CONTROL

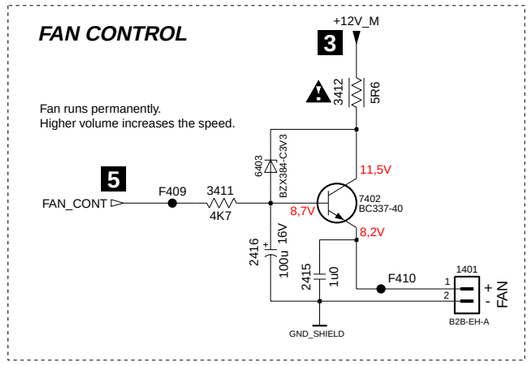

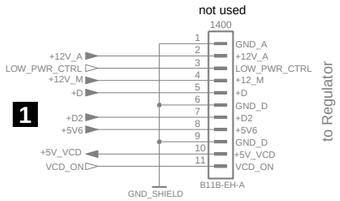

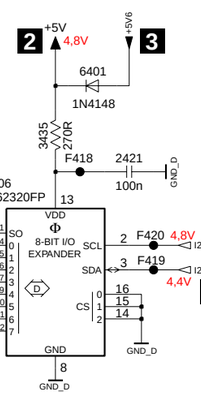

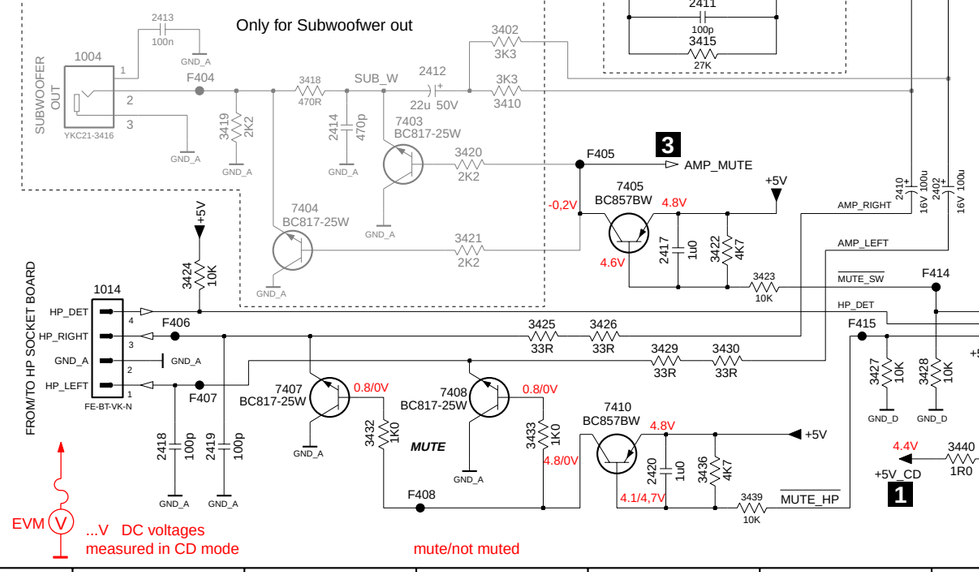

Combi board P2003 150W class D, 03.12.03

1004 D1	7409 F7
1014 E1	7410 F4
1400 C8	7411 F6
1401 C9	9269 F7
2400 A4	9499 F6
2401 A4	F401 B3
2402 D6	F402 A6
2403 A2	F403 C5
2404 B4	F404 D1
2405 B5	F405 D4
2406 B2	F406 E1
2407 C4	F407 F1
2408 C2	F408 F3
2409 C4	F409 B8
2410 D5	F410 C9
2411 C4	F411 E6
2412 D3	F412 E8
2413 C1	F413 E8
2414 D2	F414 E6
2415 C9	F415 E5
2416 B8	F416 F8
2417 E4	F417 E8
2418 F1	F418 E9
2419 F1	F419 E9
2420 F4	F420 E9
2421 E9	
3400 A4	
3401 A3	
3402 D3	
3403 B3	
3404 B3	
3405 B3	
3406 B5	
3407 B3	
3408 B3	
3409 C3	
3410 D3	
3411 B8	
3412 A9	
3413 C3	
3415 D4	
3418 D2	
3419 D1	
3420 D3	
3421 E3	
3422 E4	
3423 E5	
3424 E1	
3425 E3	
3426 E4	
3427 F5	
3428 F5	
3429 E4	
3430 E4	
3431 E7	
3432 F2	
3433 F3	
3434 F8	
3435 D9	
3436 F4	
3437 F6	
3438 F7	
3439 F4	
3440 F6	
6401 D9	
6403 B8	
6404 B5	
7400-1 C4	
7400-2 A4	
7402 B9	
7403 D3	
7404 E2	
7405 D4	
7406 E9	
7407 F2	
7408 F3	

11-7

3 COMBI BOARD
SUPPLY, OSCILLATOR & PRE-AMP

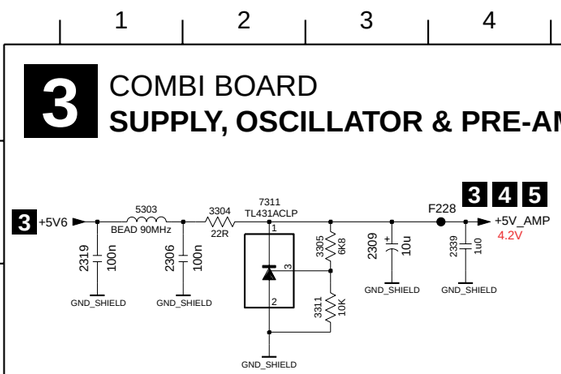

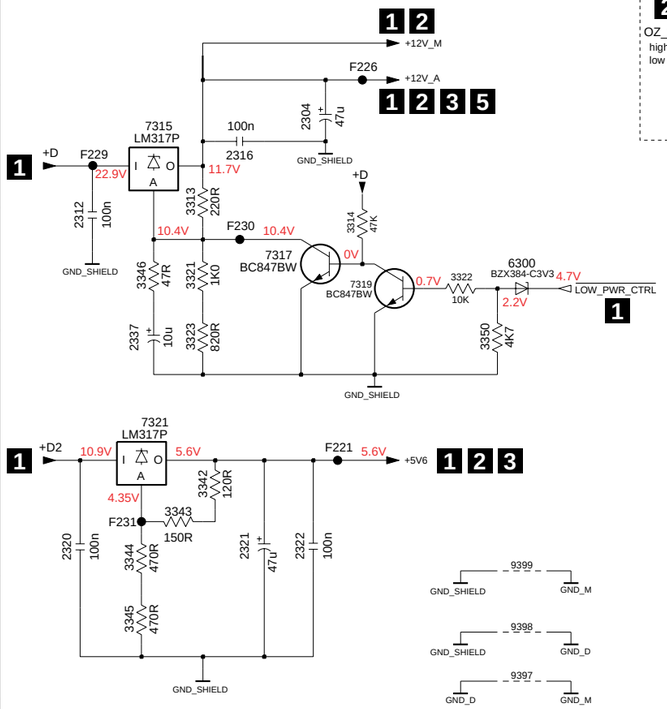

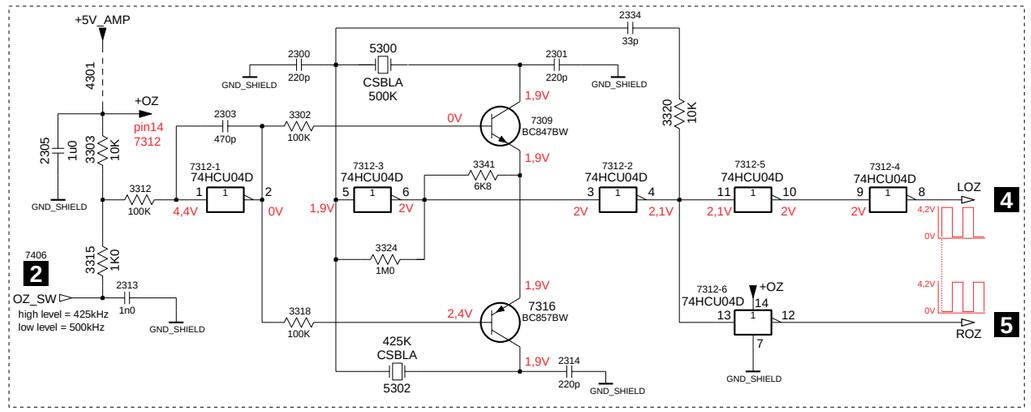

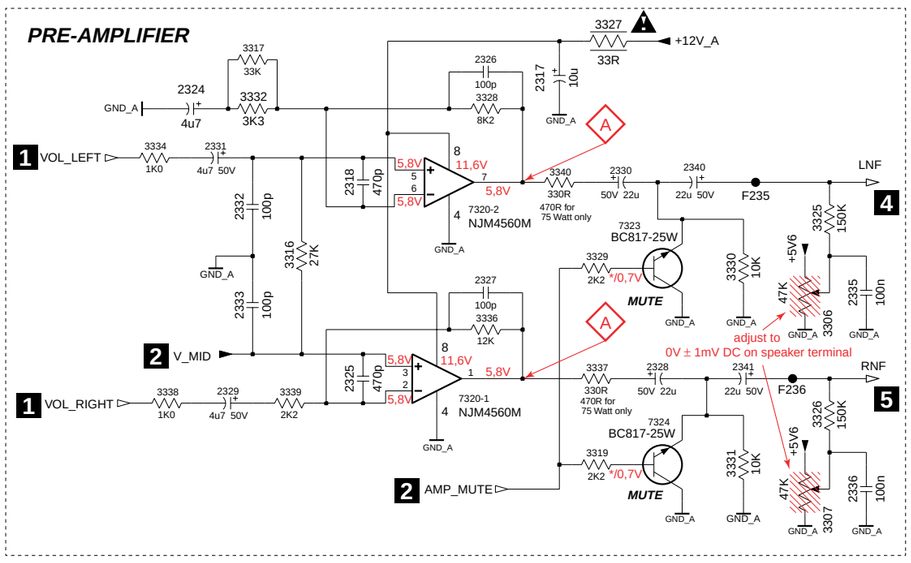

Combi board P2003 150W class D, 09.04.04

EVM V ...V DC voltages measured in tuner mode
... / ... V off/on
* ... not defined, floating

for wave forms see chapter 11-2 Service Hints

Attention:
Adjustment to 0V ± 1mV DC has to be done with "cold" set.
After operating a few minutes the value may increase up to 30mV.

2300 A7
2301 A9
2303 B6
2304 D3
2305 B5
2306 A1
2309 A3
2312 E1
2313 C6
2314 D9
2316 D2
2317 E10
2318 E8
2319 A1
2320 H1
2321 G2
2322 G3
2324 E7
2325 G8
2326 D9
2327 F9
2328 G11
2329 G7
2330 E11
2331 E7
2332 F7
2333 F7
2334 A10
2335 F12
2336 H12
2337 F1
2339 A4
2340 E11
2341 G12
3302 B7
3303 B5
3304 A2
3305 A3
3306 G12
3307 H12
3311 B3
3312 B6
3313 D2
3314 E3
3315 C5
3316 F8
3317 D8
3318 C7
3319 H10
3320 B10
3321 E2
3322 E4
3323 F2
3324 C8
3325 F12
3326 G12
3327 D10
3328 E9
3329 F10
3330 F11
3331 H11
3332 E8
3334 E7
3336 G9
3337 G10
3338 G7
3339 G8
3340 E10
3341 B8
3342 G2
3343 G1
3344 G1
3345 H1
3346 E1
3350 F4
4301 A5
5300 A8
5302 D8
5303 A1
6300 E4
7309 B9
7311 B2
7312-1 B6
7312-2 B10
7312-3 B8
7312-4 B12
7312-5 B11
7312-6 C10
7315 D1
7316 C9
7317 E2
7319 E3
7320-1 G9
7320-2 F9
7321 F1
7323 F10
7324 G11
9397 H4
9398 H4
9399 G4
F221 F3
F226 C3
F228 A4
F229 D1
F230 E2
F231 G2
F235 F12
F236 G12

11-8

2100 A11 2101 A11 2102 A10 2103 A10 2104 D1 | 2106 B12 2108 D3 2110 D8 2111 G10 2112 D11 | 2113 E8 2114 D10 2115 E14 2116 F12 2117 F14 | 2118 G12 2119 G3 2120 F2 2121 H9 2122 C11 | 2124 H10 2125 G1 2126 H7 2128 H11 2130 G11 | 2132 G9 2134 F14 2135 G4 2136 H10 2137 D7 | 2138 A11 2139 H11 3100 D2 3101 B11 3102 E6 | 3103 B11 3106 C12 3107 G7 3108 C4 3109 C10 | 3110 E4 3111 C9 3114 E3 3115 F6 3117 D7 | 3119 D9 3120 G10 3121 G10 3122 G9 3125 H4 | 3126 D1 3127 H6 3129 G11 3130 G11 3133 G7 | 3134 G6 3135 F10 3136 E8 3137 F13 3138 F13 | 3139 G1 3140 G4 3142 G8 3143 G5 3144 G2 | 3145 D11 3146 G7 3147 D5 3148 G2 3149 F3 | 3151 C10 3152 C9 3153 C9 3154 E8 3155 E8 | 3156 F10 5100 A11 5101 E12 5102 F13 5103 H11 | 5105 E12 6106 D9 6108 G9 6109 E8 6110 C10 | 6111 H8 6113 H9 6114 E9 7104 B13 7105 C7 | 7109 C11 7111 C10 7113 F10 7114 D9 7115 G9 | 7117 G12 7118 F7 7119 G6 7121 F11 7122-1 G3 | 7122-2 G4 7122-3 G4 7122-4 G5 7122-5 E4 7122-6 E3 | 7128 F6 7129 D6 7130 D2 7131 H6 7132 B11 | 7133 F11 9199 D1 F102 G9 F112 G12 F114 D14

1 2 3 4 5 6 7 8 9 10 11 12 13 14

4 COMBI BOARD
AMPLIFIER / LEFT CHANNEL

*** VARIANT-TABLE**

POS.NR	67781 150W	67841/67941 75W SA / 75W TAPE
2102	220u	
2138		330u
2119	4n7	1n5
2124	220u	
2139		330u
2135	470p	1n
3101	0R033	0R047
3109	100R	4R7
3111	10R	1R0
3119	10K	15K
3120	4K7	4K7
3121	4K7	4K7
3130	0R033	0R047
3135	100R	4R7
3139	470R	560R
3140	1K2	1K5
3152	1K8	1K5
3153	1K8	1K5
3156	10R	1R0
5101		30u
5105	20u	
7109	PHX18NQ11T	STP14NF12FP
7121	PHX18NQ11T	STP14NF12FP
7132	BC817-25W	
7133	BC817-25W	

SA stands for **S**ound **A**gent

Power Stage 1

+AMP_L, +43V, 2101 100n GND_SHIELD, 5100 BEAD 90MHz, 2100 100n GND_SHIELD, 2103 100n, 2102 220u, 2138 330u 50V, GND_SHIELD, 3101 0R033, 2106 1n0, 7132 BC817-25W, 3103 1K0, 7104 BC856B, Short Circuit Protection, +4,2V, SC_L to E1, 3109 100R, H2, 7109 STP14NF12FP, 7111 BC807-25W, 3106 22K, 2122 220p, 3145 22R, 2112 220p, GND_SHIELD

Driver Stage + Levelshifter

7105 74LV14D, 3117 1K8, 2137 33p, 3111 10R, 6110 BAV99 COL, 7114 BC817-25W, 3152 1K8, 3153 1K8, 3151 100K, +V1L, 3119 10K, 2110 1u0, 6106 BZX384-C6V8, -V1L 1.2V, 2114 10u, 29,3V, 6109 BAS316, 3154 1K0, 6114 BAV99 COL, 1.2V, 7.8V, G2, +46V, -39V, +50V, -40V, H2, I, +42V, -42V

Supply High-Side Driver

Supply Low-Side Driver

Short Circuit Protection 7117 MMBTA42, -42,8V, -42,9V, 44,7V, 3129 1K0, F112, 3130 0R033, 2118 1n0, 2130 100n GND_SHIELD, 5103 BEAD 90MHz, 2128 100n GND_SHIELD, -43V, -AMP 1

Output Filters

5105 20u, 5101 30u, J, K, 5102 HF2024, 2134 220n, 2115 1n0, 2117 1n0, to_LS_L, to_LS_L_neg, 5

Amplifier ON-OFF Switch

2 7406, AMP_OFF, 9199, 3100 10K 0.7V, 7130 BC847BW, 3126 10K, 2104 10n, 2108 10n, GND_D, GND_SHIELD, 0V

from 7104 SC_L, 7122-6 74HCU04D, 7122-5 74HCU04D, 3114 4K7, 3110 100K, 4.2V

3 +5V_AMP 4.2V, 3108 4K7, AMP_D 5

3147 10K, 7129 BC856B, 0,5V, -41,7V, 3102 4K7

Modulator

+5V_AMP, 2120 1u0, 4K7 3149, 3148 18K, 3144 150K, GND_SHIELD, 3 LNF, 3139 470R, 2125 4n7, 7122-1 74HCU04D, 7122-2 74HCU04D, 7122-3 74HCU04D, 7122-4 74HCU04D, B, C, D, E, F, 2.1V, 1.9V, 3140 1K2, 2119 4n7, 2135 470p, 3125 1K0, LOZ, 3 OSCILLATOR, GND_A

3115 1K0, 7128 BC856B, 0V, 0,4V, 3143 1K0

7118 74LV14D, G1, -36V, -43V, 7119 MMBTA42, 3133 5K6, 3146 1K5, 3107 1K5, 3134 330R, 100p 2126, 3142 1K2, 6111 BAS316, -41,8V, 7131 BC846B, -42,4V, 3127 10K

3136 4K7, 3155 4K7

7133 BC817-25W, 7113 BC807-25W, 3135 100R, 3156 10R, 7121 STP14NF12FP, F102, +VL, 7115 BC817-25W, 3122 15K, 3121 4K7, 3120 4K7, 2132 1u0, 6108 BZX384-C6V8, 2111 1u0, 7,8V, -40,7V, -VL, -VL2, 33,3V, 1,2V, 6113 BAV99 COL, 2121 1u0, -43V, 2136 100n, 2124 220u, 2139 330u 50V

EVM (V) ...V DC voltages measured in Tuner mode

for wave forms see chapter 11-2 Service Hints

11-9

1201 F14 1211 E14 1212 E14 1307-A E15 1307-B E15 1307-C E15
1307-D F15 2109 G12 2200 A10 2201 A9 2202 A10 2203 A9
2205 B14 2206 B11 2208 D2 2209 D12 2210 D7 2211 G9
2212 D10 2213 G10 2214 D9 2215 E13 2216 E11 2217 C1
2218 G9 2219 E13 2220 F10 2221 F2 2222 F3 2225 G9
2226 F1 2227 H60 2229 G10 2234 E13 2236 G8 2237 G3
2238 H8 2239 D7 2240 D60 2241 A10 2242 G10 3112 G12
3113 G12 3116 G13 3201 B1 3202 B8 3203 B14 3205 B10
3207 B13 3209 B10 3210 D3 3211 F4 3212 F9 3213 G3
3215 C9 3216 C11 3217 D3 3218 D4 3219 C13 3221 G5
3223 C13 3224 C12 3225 C6 3226 D12 3227 D5 3228 C8
3229 D13 3231 F9 3232 F8 3236 D10 3237 E11 3240 E12
3241 F10 3243 F10 3245 E7 3246 E6 3247 E9 3248 E7
3251 F1 3252 G3 3253 H7 3254 F2 3255 G5 3256 G6
3258 F1 3259 F2 3261 E7 3262 G14 3263 G13 3264 C9
3265 C8 3266 C9 3267 D7 3268 E7 3269 E8 5200 A10
5201 E11 5202 E12 5203 G10 5204 D11 5205 C11 6104 G12
6202 B13 6205 C14 6206 D14 6208 H8 6209 D12 6210 D8
6211 B8 6212 D8 6213 G8 6214 D7 6216 F14 6217 H7
7110 G12 7112 G13 7203 B13 7208 B11 7209 B6 7210 F9
7211 B13 7218 C12 7220 C10 7221 C10 7222 C8 7223 F8
7227 F11 7228 E6 7231 E10 7232-1 F2 7232-2 G3 7232-3 G4
7232-4 G4 7232-5 D4 7232-6 D3 7235 F7 7238 G6 7239 D5
7240 F5 7243 G14 7244 B10 7245 E9 7231 D4 7232-3 G4
F214 E14 F215 G14 F216 E15 F217 E15 F218 E15 F219 E15

5 COMBI BOARD
AMPLIFIER / RIGHT CHANNEL

*** VARIANT-TABLE**

POS.NR	67781 150W	67841/67941 75W SA / 75W TAPE
2201	220u	
2241		330u
2221	4n7	1n5
2225	220u	
2242		330u
2237	470p	1n
3202	10R	1R
3205	0R033	0R047
3215	100R	4R7
3228	10K	15K
3212	4K7	4K7
3231	4K7	4K7
3243	0R033	0R047
3247	100R	4R7
3251	470R	560R
3252	1K2	1K5
3265	1K8	1K5
3266	1K8	1K5
3269	10R	1R0
5201		30u
5204	20u	
7218	PHX18NQ11T	STP14NF12FP
7231	PHX18NQ11T	STP14NF12FP
7244	BC817-25	
7245	BC817-25	

SA stands for **S**ound **A**gent

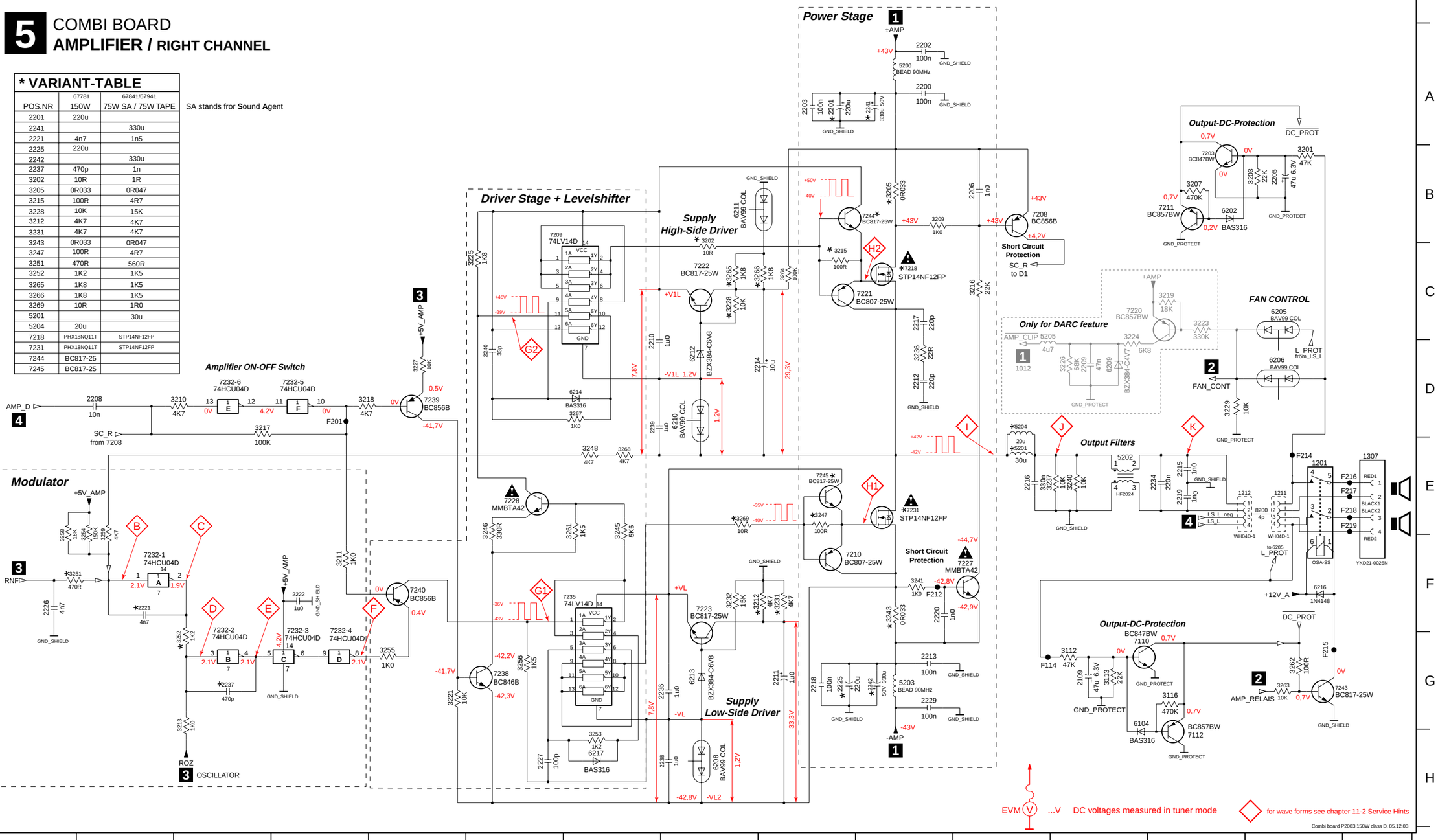

11-10

COMBI BOARD / componentside view Layout stage .4

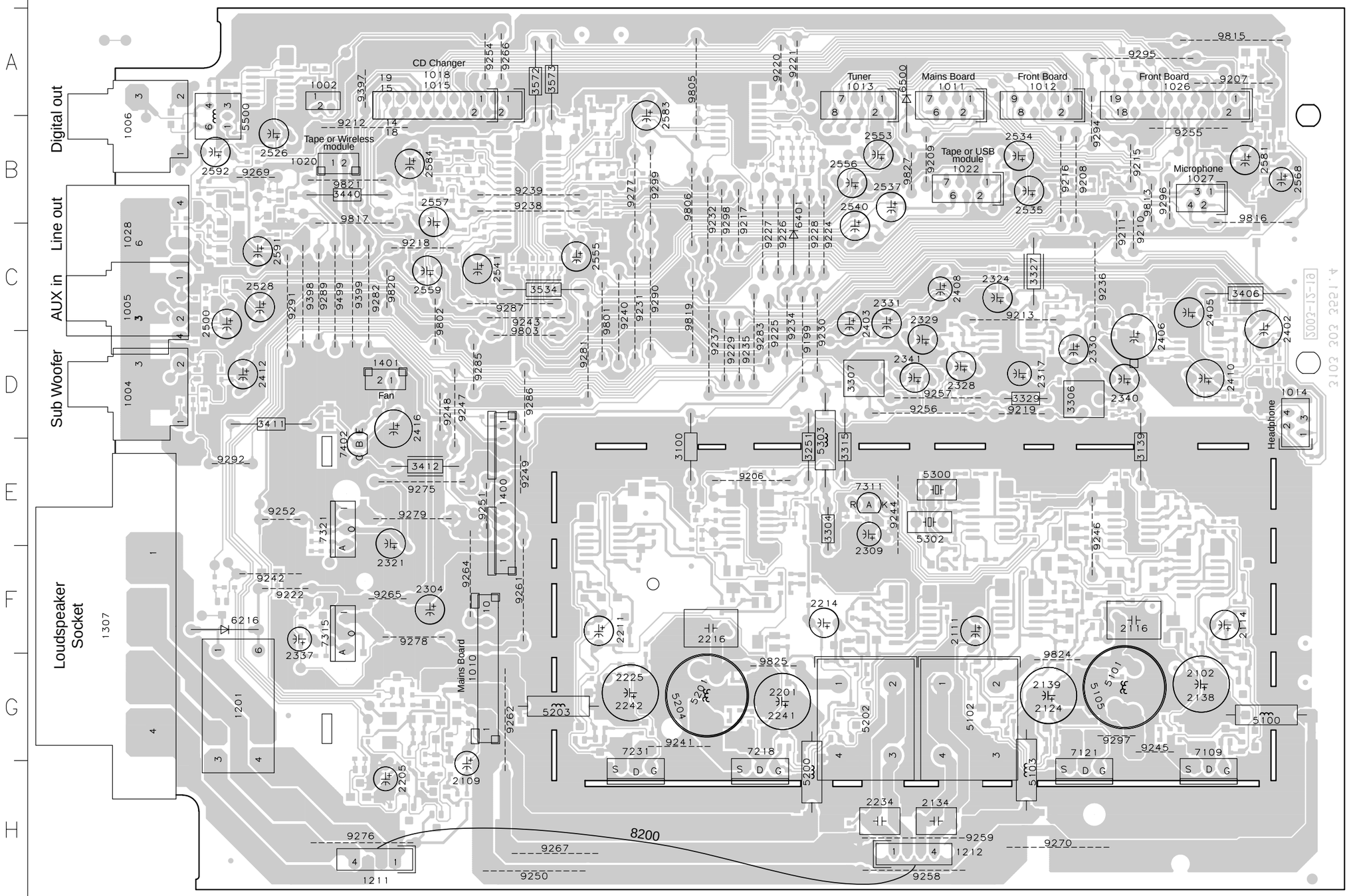

This assembly drawing shows a summary of all possible versions.
For components used in a specific version see schematic diagram respectively partslist.

P2003 75-150W class D Combi Board .4, 030204

1002 A2
1004 D1
1005 C1
1006 B1
1010 G4
1011 A8
1012 A9
1013 A7
1014 D11
1015 A3
1018 A3
1020 B3
1022 B8
1026 A10
1027 B11
1028 C1
1201 G2
1211 H3
1212 H8
1307 F1
1400 E4
1401 D3
2102 G11
2109 H4
2111 F8
2114 F11
2116 F10
2124 G9
2134 H8
2138 G11
2139 G9
2201 G7
2205 H3
2211 F5
2214 F7
2216 F6
2225 G5
2234 H8
2241 G7
2242 G5
2304 F3
2309 F8
2317 D9
2321 F3
2324 C9
2328 D8
2329 C8
2330 D10
2331 C8
2337 G2
2340 D10
2341 D8
2402 C11
2403 C7
2405 C11
2406 D10
2408 C8
2410 D11
2412 D2
2416 D3
2500 C1
2526 B2
2528 C2
2534 B9
2535 B9
2537 B8
2540 C8
2541 C4
2553 B8
2555 C5
2556 B7
2557 B3
2559 C3
2568 B11
2581 B11
2583 A6
2584 B3
2591 C2
2592 B1
3100 E6
3139 E10
3251 E7
3304 E7
3306 D9
3307 D7
3315 E7
3327 C9
3329 D9
3406 C11
3411 D2
3412 E3
3440 B3
3534 C4
3572 A4
3573 A5
5100 G11
5101 G10
5102 G8
5103 H9
5105 G10
5200 H7
5201 G6
5202 G7
5203 G5
5204 G6
5300 E8
5302 E8
5303 E7
5500 B2
6216 F2
6401 B7
6500 A8
7109 G11
7121 G10
7218 G6
7231 G5
7311 E8
7315 F2
7321 E2
7402 E3
8200 H5
9199 D7
9206 E6
9207 A11
9208 B9
9209 B8
9210 C10
9211 C10
9212 B3
9213 C9
9215 B10
9216 B9
9217 B6
9218 C3
9219 D9
9220 A7
9221 A7
9222 F2
9224 C7
9225 D7
9226 C7
9227 C7
9228 C7
9229 D6
9230 D7
9231 C5
9232 B6
9234 C7
9235 D6
9236 C10
9237 D6
9238 B4
9239 B4
9240 C5
9241 G6
9242 F2
9243 C4
9244 E8
9245 G10
9246 E10
9247 D4
9248 D4
9249 E4
9250 H4
9251 E4
9252 E2
9254 A4
9255 B10
9256 D8
9257 D8
9258 H8
9259 H8
9261 F4
9262 G4
9264 F4
9265 F3
9266 A4
9267 H5
9269 B2
9270 H9
9275 E3
9276 H3
9277 B5
9278 F3
9279 E3
9281 D5
9282 C3
9283 D6
9285 D4
9286 D4
9287 C4
9289 C2
9290 C6
9291 C2
9292 E2
9294 B10
9295 A10
9296 B10
9297 G10
9298 B6
9299 B6
9397 A3
9398 C2
9399 C3
9499 C3
9801 C5
9802 C4
9803 D4
9805 A6
9806 B6
9813 B10
9815 A11
9816 B11
9817 B3
9819 C6
9820 C3
9821 B3
9824 G9
9825 G7
9827 B8

11-11

COMBI BOARD / copperside view Layout stage .4

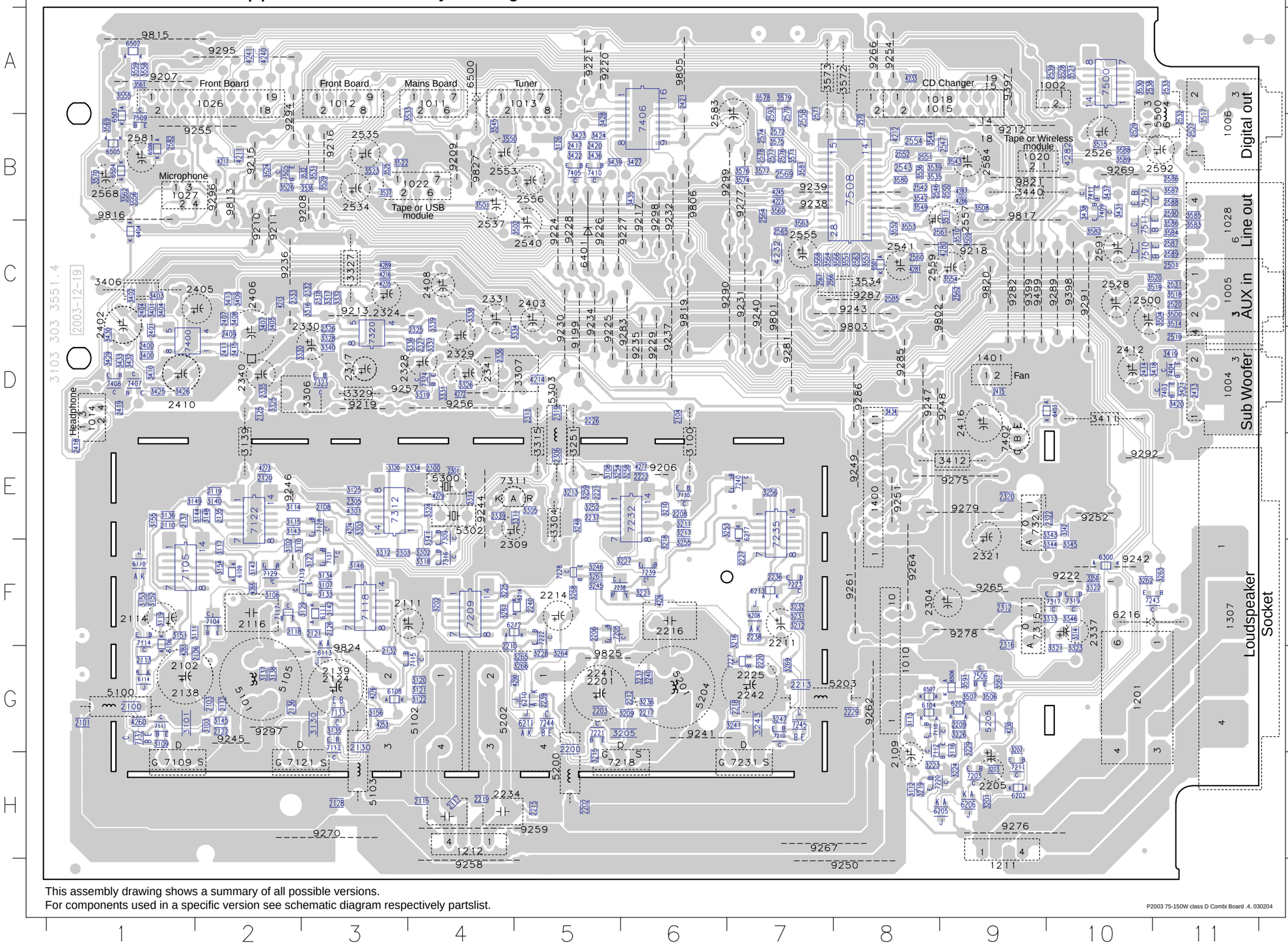

This assembly drawing shows a summary of all possible versions.
For components used in a specific version see schematic diagram respectively partslist.

P2003 75-150W class D Combi Board .4, 030204

11-12

Mains Board I copperside view

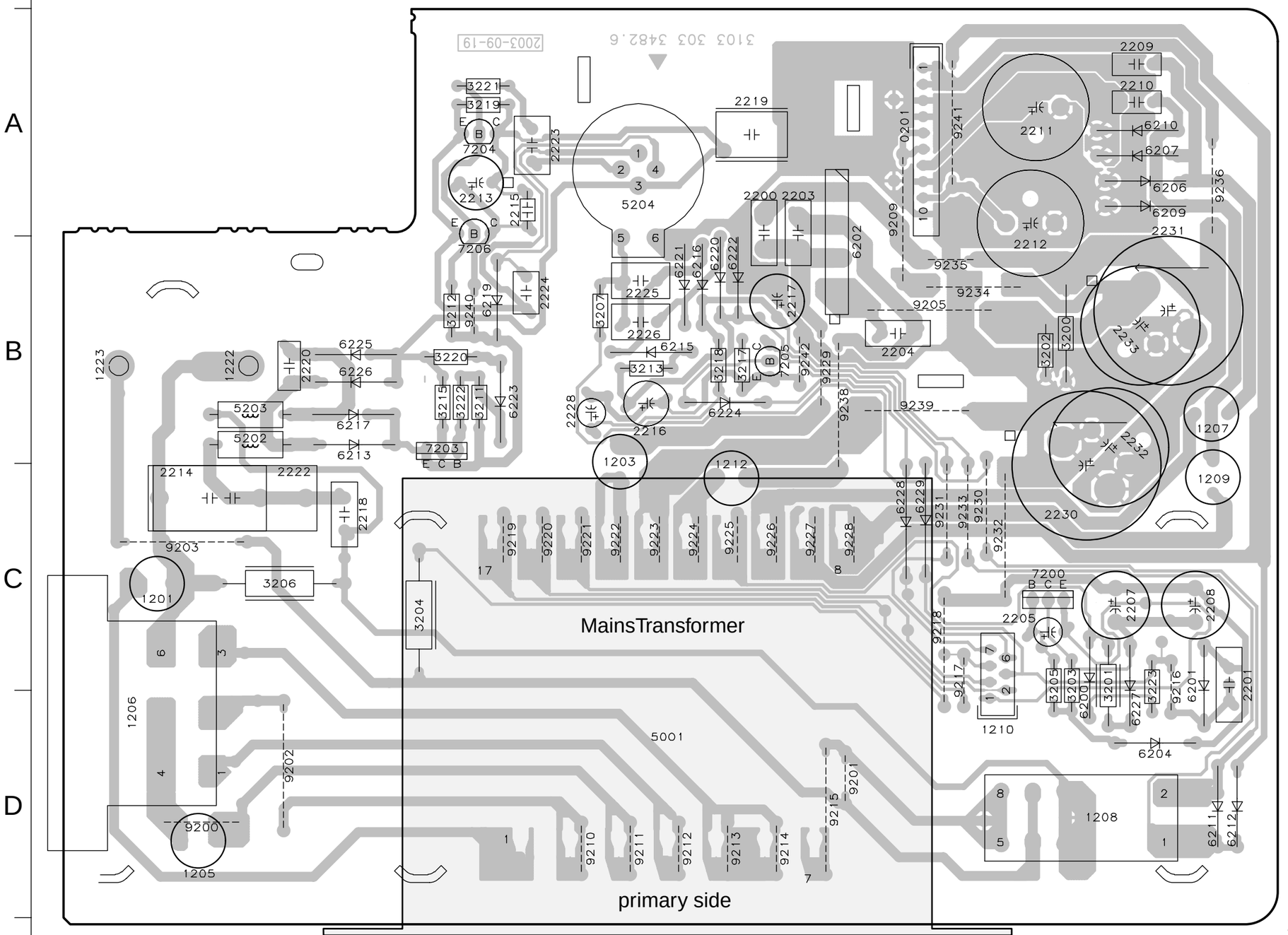

This assembly drawing shows a summary of all possible versions.
For components used in a specific version see schematic diagram respectively partslist.

Power2002 70W Class D - Mains Board stage.6 2003 10 02

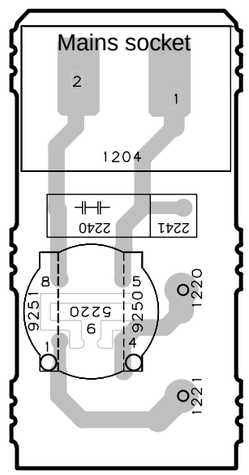

0201 A4
1201 C1
1203 B3
1205 D1
1206 D1
1207 B5
1208 D5
1209 C5
1210 C5
1212 C4
1222 B1
1223 B1
2200 A4
2201 D5
2203 A4
2204 B4
2205 C5
2207 C5
2208 C5
2209 A5
2210 A5
2211 A5
2212 A4
2213 A2
2214 B1
2215 A3
2216 B3
2217 B4
2218 C2
2219 A4
2220 B1
2222 C1
2223 A3
2224 B3
2225 B3
2226 B3
2228 B3
2230 C5
2231 B5
2232 B5
2233 B5
3200 B5
3201 D5
3202 B5
3203 D5
3204 C2
3205 C5
3206 C1
3207 B3
3211 B2
3212 B2
3213 B3
3215 B2
3217 B4
3218 B3
3219 A3
3220 B2
3221 A2
3222 B2
3223 C5
5001 C3
5202 B1
5203 B1
5204 A3
6200 D5
6201 D5
6202 B4
6204 D5
6206 A5
6207 A5
6209 A5
6210 A5
6211 D5
6212 D5
6213 B2
6215 B3
6216 B2
6217 B2
6219 B2
6220 A3
6221 B3
6222 A3
6223 B2
6224 B3
6225 B2
6226 B2
6227 C5
6228 C4
6229 C4
7200 C5
7203 C2
7204 A2
7205 B4
7206 A2
9200 D1
9201 D4
9202 D1
9203 C1
9205 B4
9209 A4
9210 D3
9211 D3
9212 D3
9213 D3
9214 D4
9215 D4
9216 C5
9217 C4
9218 C4
9219 C2
9220 C3
9221 C3
9222 C3
9223 C3
9224 C3
9225 C4
9226 C4
9227 C4
9228 C4
9229 B4
9230 C5
9231 C4
9232 C5
9233 C5
9234 B5
9235 B4
9236 A5
9238 B4
9239 B4
9240 B2
9241 A4
9242 B4

11-13

0201 D10 1201 A3 1203 A5 1205 A3 1206 A3
1207 B5 1208 C3 1209 C5 1210 C10 1212 B5
1222 A2 1223 A2 2200 A6 2201 C8 2203 A6
2204 A6 2205 A10 2207 B8 2208 B9 2209 C6
2210 C7 2211 C7 2212 B7 2213 D4 2214 D1
2215 D5 2216 E8 2217 E9 2218 E1 2219 E7
2220 E1 2222 D1 2223 D6 2224 E6 2225 C8
2226 D7 2228 C1 2230 A7 2232 A7
2233 A7 2240 A1 3200 A8 3201 B8 3202 A8
3203 B9 3204 A2 3205 B9 3206 B2 3207 C8
3211 D4 3212 D5 3213 D8 3215 E3 3217 C2
3218 B1 3219 E6 3220 E4 3221 D6 3222 E3
3223 B8 5001 A4 5202 E1 5203 E1 5204 D7
6200 B8 6201 C9 6202 A6 6204 B9 6206 C6
6207 C7 6209 C6 6210 C7 6211 C3 6212 C3
6213 D2 6215 D8 6216 D9 6217 D2 6219 D6
6220 D8 6221 E8 6222 E8 6223 E3 6224 C1
6225 E2 6226 E2 6227 E8 6228 C1 6229 C8
7200 A9 7203 D3 7204 E5 7205 B2 7206 D5
9200 A3 9201 B3 9250 A1 9251 A1

MAINS BOARD / PWR304 150W CLASS D

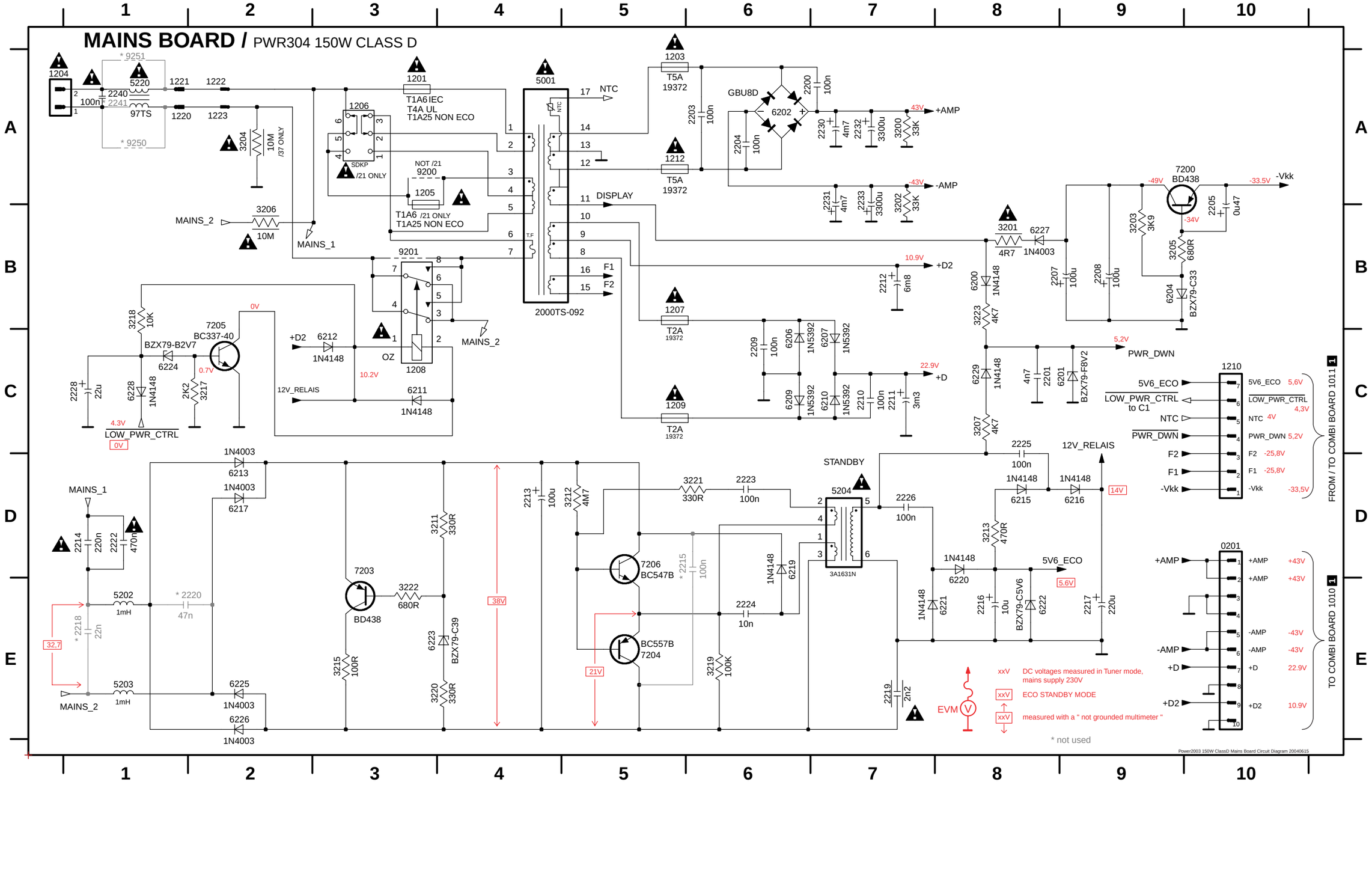

ELECTRICAL PARTSLIST *POWER 2003 75&150W Class-D* ***MAINS BOARD***

MISCELLANEOUS

1201 ⚠	4822 071 51602	FUSE 1,6A	/21/22 only
1201 ⚠	4822 253 10126	FUSE T4A	/37 only
1203 ⚠	4822 071 55002	FUSE T5A	/21/22 only
1204 ⚠	2422 030 00328	MAINS SOCKET /37	
1204 ⚠	4822 265 31015	MAINS SOCKET, IEC	
1205 ⚠	4822 071 51602	FUSE 1,6A	/21 only
1206 ⚠	2422 129 16478	VOLTAGE SELECTOR	/21 only
1207 ⚠	9965 000 07788	FUSE RAD T2A	
1208 ⚠	2422 132 07519	RELAY 1P 12V 16A	
1209 ⚠	9965 000 07788	FUSE RAD T2A	
1210	4822 267 10953	FFC-CONNECTOR, 7P, TOP ENTRY	
1212 ⚠	4822 071 55002	FUSE T5A	
5001 ⚠	3103 308 30870	Mains Transformer /37	for 75W only
5001 ⚠	3103 308 30880	Mains Transformer /22	for 75W only
5001 ⚠	3103 308 30890	Mains Transformer /21, /21M	for 75W only
5001 ⚠	3103 308 31011	Mains Transformer /37	for 150W only
5001 ⚠	3103 308 31001	Mains Transformer /22	for 150W only
5001 ⚠	3103 308 30991	Mains Transformer /21, /21M	for 150W only
5204 ⚠	2422 549 45157	STANDBY TRANSFORMER	

CAPACITORS

2200	4822 121 43696	100nF	10%	100V	
2201	4822 122 31125	4,7nF	10%	63V	
2203	4822 121 43696	100nF	10%	100V	
2204	4822 121 43696	100nF	10%	100V	
2205	5322 124 41948	0,47µF	20%	50V	
2208	2020 012 93547	100µF	20%	63V	
2209	5322 121 42386	100nF	5%	63V	
2210	5322 121 42386	100nF	5%	63V	
2211	4822 124 42367	3300µF	20%	35V	
2212	4822 124 12328	6800µF	20%	16V	
2213	4822 124 40255	100µF	20%	50V	
2214 ⚠	4822 121 10512	220nF	20%	275V	/22 only
2216	4822 124 21732	10µF	20%	25V	
2217	4822 124 80144	220µF	20%	25V	
2219 ⚠	4822 126 14088	2,2nF	20%	250V	
2222 ⚠	4822 126 13589	470nF	10%	275V	/21/37 only
2223	5322 121 42386	100nF	5%	63V	
2224	4822 122 30043	10nF	80%	63V	
2225	5322 121 42386	100nF	5%	63V	
2226	5322 121 42386	100nF	5%	63V	
2228 ©	4822 124 11946	22µF	20%	16V	
2232	2022 020 00644	3300µF	20%	50V	
2233	2022 020 00644	3300µF	20%	50V	
2240 ⚠	2022 330 00014	100nF	20%	275V	

RESISTORS

3200	4822 050 23303	33kΩ	1%	0,6W	
3201 ⚠	4822 052 10478	4,7Ω	5%	0,5W	NFR
3202	4822 050 23303	33kΩ	1%	0,6W	
3203	4822 116 52276	3,9kΩ	5%	0,5W	
3204 ⚠	4822 053 21106	10MΩ	5%	0,5W	/37 only
3205	4822 116 52228	680Ω	5%	0,5W	
3206 ⚠	4822 053 21106	10MΩ	5%	0,5W	
3207	4822 116 52283	4,7kΩ	5%	0,5W	
3211	4822 116 52219	330Ω	5%	0,5W	
3212	4822 111 30893	4,7MΩ	5%	0,2W	
3213	4822 116 83883	470Ω	5%	0,16W	
3215	4822 116 52175	100Ω	5%	0,5W	
3217	4822 116 52256	2,2kΩ	5%	0,16W	
3218	4822 050 21003	10kΩ	2%	0,25W	
3219	4822 116 52234	100kΩ	5%	0,5W	
3220	4822 116 52219	330Ω	5%	0,5W	
3221	4822 116 52219	330Ω	5%	0,5W	
3222	4822 116 52228	680Ω	5%	0,5W	
3223	4822 116 52283	4,7kΩ	5%	0,5W	

COILS

5202	4822 157 53473	1000µH
5203	4822 157 53473	1000µH
5220 ⚠	4822 157 11832	400µH, Mains filter

DIODES

6200	4822 130 30621	1N4148
6201	4822 130 34382	BZX79-B8V2
6202	4822 130 11139	GBU8D
6204	4822 130 34142	BZX79-B33
6206	4822 130 31878	1N4003G
6207	4822 130 31878	1N4003G
6209	4822 130 31878	1N4003G
6210	4822 130 31878	1N4003G
6211	4822 130 30621	1N4148
6212	4822 130 30621	1N4148
6213	4822 130 31878	1N4003G
6215	4822 130 30621	1N4148
6216	4822 130 30621	1N4148
6217	4822 130 31878	1N4003G
6219	4822 130 30621	1N4148
6220	4822 130 31983	BAT85
6221	4822 130 31983	BAT85
6223	4822 130 34145	BZX79-B39
6224	5322 130 34563	BZX79-C2V7
6225	4822 130 31878	1N4003G
6226	4822 130 31878	1N4003G
6227	4822 130 31878	1N4003G
6228	4822 130 30621	1N4148
6229	4822 130 30621	1N4148

TRANSISTORS

7200	4822 130 40995	BD438
7203	4822 130 40995	BD438
7204	4822 130 44568	BC557B
7205	4822 130 40855	BC337-40
7206	4822 130 40959	BC547B

Note:
Components printed in grey colour are considered as standard spareparts and thus not available on service stock.
Code numbers are published for orientation only.

11-14

ELECTRICAL PARTSLIST *POWER 2003 75&150W Class-D* ***COMBI BOARD***

MISCELLANEOUS

0021	4822 492 11735	SPRING TRANSISTOR	
1005	2422 026 05418	SOCKET, CINCH, 2p	
1011	4822 267 10953	FFC-CONNECTOR, 7P, TOP ENTRY	
1012	2422 025 14518	FFC-CONNECTOR, 9P, TOP ENTRY	
1013	4822 265 11515	FFC-CONNECTOR, 8P, TOP ENTRY	
1014	4822 267 10733	FFC CONNECTOR, 4P, TOP ENTRY	
1015	4822 265 10981	FFC-CONNECTOR, 15P, TOP ENTRY	
1022	4822 267 10953	FFC-CONNECTOR, 7P, TOP ENTRY	
1026	4822 265 11553	FFC-CONNECTOR, 19P, TOP ENTRY	
1201	2422 132 07517	RELAY 2P 12V	
1307	2422 015 19893	SOCKET, CLICKFIT, 4P	

CAPACITORS

2100 ©	4822 122 33496	100nF	10%	63V	
2101 ©	2222 580 15649	100nF	10%	50V	
2102	2022 031 00196	220µF	20%	50V	for 150W only
2103 ©	2222 580 15649	100nF	10%	50V	
2104 ©	5322 126 11583	10nF	10%	63V	
2106 ©	5322 126 11578	1nF	10%	63V	
2108 ©	5322 126 11583	10nF	10%	63V	
2109	4822 124 80483	47µF	20%	6,3V	
2110 ©	3198 017 41050	1µF	20%	10V	
2111	4822 124 21913	1µF	20%	63V	
2112 ©	4822 126 13883	220pF	5%	50V	
2113 ©	3198 017 41050	1µF	20%	10V	
2114	4822 124 40248	10µF	20%	63V	
2115 ©	5322 126 11578	1nF	10%	63V	
2116	5322 121 42661	330nF	5%	63V	
2117 ©	5322 126 11578	1nF	10%	63V	
2118 ©	5322 126 11578	1nF	10%	63V	
2119 ©	4822 126 13193	4,7nF	10%	63V	for 150W only
2119 ©	4822 126 14247	1,5nF	10%	50V	for 75W only
2120 ©	3198 017 41050	1µF	20%	10V	
2121 ©	3198 017 41050	1µF	20%	10V	
2122 ©	4822 126 13883	220pF	5%	50V	
2124	2022 031 00196	220µF	20%	50V	for 150W only
2125 ©	4822 126 13193	4,7nF	10%	63V	
2126 ©	2020 552 94427	100pF	5%	50V	
2128 ©	2222 580 15649	100nF	10%	50V	
2130 ©	4822 122 33496	100nF	10%	63V	
2132 ©	3198 017 41050	1µF	20%	10V	
2134	4822 121 42408	220nF	5%	63V	
2135 ©	3198 016 31020	1nF	5%	25V	for 75W only
2135 ©	4822 126 13881	470pF	5%	50V	for 150W only
2136 ©	2222 580 15649	100nF	10%	50V	
2137 ©	2222 867 15339	33pF	5%	50V	
2138	2020 012 93762	330µF	20%	50V	for 75W only
2139	2020 012 93762	330µF	20%	50V	for 75W only
2200 ©	4822 122 33496	100nF	10%	63V	
2201	2022 031 00196	220µF	20%	50V	for 150W only
2202 ©	2222 580 15649	100nF	10%	50V	
2203 ©	2222 580 15649	100nF	10%	50V	
2205	4822 124 80483	47µF	20%	6,3V	
2206 ©	5322 126 11578	1nF	10%	63V	
2208 ©	5322 126 11583	10nF	10%	63V	
2210 ©	3198 017 41050	1µF	20%	10V	
2211	4822 124 21913	1µF	20%	63V	
2212 ©	4822 126 13883	220pF	5%	50V	
2213 ©	4822 122 33496	100nF	10%	63V	
2214	4822 124 40248	10µF	20%	63V	
2215 ©	5322 126 11578	1nF	10%	63V	
2216	5322 121 42661	330nF	5%	63V	
2217 ©	4822 126 13883	220pF	5%	50V	
2218 ©	2222 580 15649	100nF	10%	50V	
2219 ©	5322 126 11578	1nF	10%	63V	
2220 ©	5322 126 11578	1nF	10%	63V	
2221 ©	4822 126 13193	4,7nF	10%	63V	for 150W only
2221 ©	4822 126 14247	1,5nF	10%	50V	for 75W only
2222 ©	3198 017 41050	1µF	20%	10V	
2225	2022 031 00196	220µF	20%	50V	for 150W only
2226 ©	4822 126 13193	4,7nF	10%	63V	
2227 ©	2020 552 94427	100pF	5%	50V	
2229 ©	2222 580 15649	100nF	10%	50V	
2234	4822 121 42408	220nF	5%	63V	
2236 ©	3198 017 41050	1µF	20%	10V	
2237 ©	3198 016 31020	1nF	5%	25V	for 75W only
2237 ©	4822 126 13881	470pF	5%	50V	for 150W only
2238 ©	3198 017 41050	1µF	20%	10V	
2239 ©	3198 017 41050	1µF	20%	10V	
2240 ©	2222 867 15339	33pF	5%	50V	
2241	2020 012 93762	330µF	20%	50V	for 75W only
2242	2020 012 93762	330µF	20%	50V	for 75W only
2300 ©	4822 126 13883	220pF	5%	50V	
2301 ©	4822 126 13883	220pF	5%	50V	
2303 ©	4822 126 13881	470pF	5%	50V	
2304	4822 124 80231	47µF	20%	16V	
2305 ©	3198 017 41050	1µF	20%	10V	
2306 ©	4822 126 14585	100nF	10%	50V	
2309	4822 124 21732	10µF	20%	25V	
2312 ©	2222 580 15649	100nF	10%	50V	
2313 ©	5322 126 11578	1nF	10%	63V	
2314 ©	4822 126 13883	220pF	5%	50V	
2316 ©	4822 126 14585	100nF	10%	50V	
2317	4822 124 21732	10µF	20%	25V	
2318 ©	4822 126 13881	470pF	5%	50V	
2319 ©	4822 126 14585	100nF	10%	50V	
2320 ©	4822 126 14585	100nF	10%	50V	
2321	4822 124 80231	47µF	20%	16V	
2322 ©	4822 126 14585	100nF	10%	50V	
2324	4822 124 40769	4,7µF	20%	100V	
2325 ©	4822 126 13881	470pF	5%	50V	
2326 ©	2020 552 94427	100pF	5%	50V	
2327 ©	2020 552 94427	100pF	5%	50V	
2328	4822 124 81151	22µF	20%	50V	
2329	4822 124 40769	4,7µF	20%	100V	
2330	4822 124 81151	22µF	20%	50V	
2331	4822 124 40769	4,7µF	20%	100V	
2332 ©	2020 552 94427	100pF	5%	50V	
2333 ©	2020 552 94427	100pF	5%	50V	
2334 ©	2222 867 15339	33pF	5%	50V	
2335 ©	2238 586 59812	100nF	10%	50V	
2336 ©	2238 586 59812	100nF	10%	50V	
2337	4822 124 21732	10µF	20%	25V	
2339 ©	3198 017 41050	1µF	20%	10V	
2340	4822 124 81151	22µF	20%	50V	
2341	4822 124 81151	22µF	20%	50V	
2400 ©	2020 552 94427	100pF	5%	50V	
2401 ©	4822 126 13881	470pF	5%	50V	
2402	4822 124 23052	100µF	20%	16V	
2403	4822 124 22651	1µF	20%	50V	
2404 ©	2020 552 94427	100pF	5%	50V	
2405	4822 124 40769	4,7µF	20%	100V	
2406	4822 124 80791	470µF	20%	16V	
2407 ©	2020 552 94427	100pF	5%	50V	
2408	4822 124 22651	1µF	20%	50V	
2409 ©	4822 126 13881	470pF	5%	50V	
2410	4822 124 23052	100µF	20%	16V	
2411 ©	2020 552 94427	100pF	5%	50V	
2415 ©	3198 017 41050	1µF	20%	10V	

11-15

ELECTRICAL PARTSLIST *POWER 2003 75&150W Class-D* *COMBI BOARD*

CAPACITORS

2416	4822 124 23052	100µF	20%	16V		
2417 ©	3198 017 41050	1µF	20%	10V		
2418 ©	2020 552 94427	100pF	5%	50V		
2419 ©	2020 552 94427	100pF	5%	50V		
2420 ©	3198 017 41050	1µF	20%	10V		
2421 ©	2238 586 59812	100nF	10%	50V		
2500	2022 020 00734	1µF	20%	50V		
2519 ©	2238 586 59812	100nF	10%	50V		
2520 ©	4822 126 13881	470pF	5%	50V		
2528	2022 020 00734	1µF	20%	50V		
2531 ©	4822 126 13881	470pF	5%	50V		
2534	4822 124 40769	4,7µF	20%	100V		
2535	4822 124 40769	4,7µF	20%	100V		
2536 ©	2238 586 59812	100nF	10%	50V		
2537	2022 020 00734	1µF	20%	50V		
2540	2022 020 00734	1µF	20%	50V		
2541	4822 124 81151	22µF	20%	50V		
2542 ©	5322 126 11578	1nF	10%	63V		
2543 ©	4822 126 14583	470nF	10%	16V		
2546©	4822 126 14549	33nF	10%	16V		
2547 ©	2222 780 15656	330nF	10%	16V		
2550 ©	5322 126 11579	3,3nF	10%	63V		
2551 ©	4822 126 13879	220nF	20%	16V		
2552 ©	4822 126 13193	4,7nF	10%	63V		
2553	4822 124 21913	1µF	20%	63V		
2554 ©	4822 126 14583	470nF	10%	16V		
2555	4822 124 80231	47µF	20%	16V		
2556	4822 124 21913	1µF	20%	63V		
2557	2022 020 00734	1µF	20%	50V		
2558 ©	4822 126 14583	470nF	10%	16V		
2559	2022 020 00734	1µF	20%	50V		
2560 ©	4822 126 13881	470pF	5%	50V		
2561 ©	4822 126 13881	470pF	5%	50V		
2562 ©	4822 126 13881	470pF	5%	50V		
2563 ©	4822 126 13881	470pF	5%	50V		
2564 ©	4822 126 13881	470pF	5%	50V		
2565 ©	4822 126 13881	470pF	5%	50V		
2566 ©	4822 126 13881	470pF	5%	50V		
2567 ©	4822 126 13881	470pF	5%	50V		
2568	4822 124 80483	47µF	20%	6,3V		
2569 ©	4822 126 14583	470nF	10%	16V		
2570 ©	2020 552 94427	100pF	5%	50V		
2571 ©	2020 552 94427	100pF	5%	50V		
2572 ©	4822 126 13879	220nF	20%	16V		
2574 ©	4822 126 13193	4,7nF	10%	63V		
2576 ©	5322 126 11578	1nF	10%	63V		
2577 ©	4822 126 14549	33nF	10%	16V		
2578 ©	5322 126 11579	3,3nF	10%	63V		
2579 ©	2020 552 96684	470nF	10%	25V		
2581	4822 124 21913	1µF	20%	63V		
2582 ©	2238 586 59812	100nF	10%	50V		
2585 ©	2238 586 59812	100nF	10%	50V		
2593 ©	2222 780 15656	330nF	10%	16V		

RESISTORS

3100	4822 050 21003	10kΩ	2%	0,25W		
3101 ©	2122 118 06085	0,033Ω	5%	1W	for 150W only	
3101 ©	2122 118 06235	0,047Ω	5%	1W	for 75W only	
3102 ©	4822 051 30472	4,7kΩ	5%	0,06W		
3103 ©	4822 051 30102	1kΩ	5%	0,06W		
3106 ©	4822 051 30223	22kΩ	5%	0,06W		
3107 ©	4822 051 30152	1,5kΩ	5%	0,06W		
3108 ©	4822 051 30472	4,7kΩ	5%	0,06W		
3109 ©	4822 051 30101	100Ω	5%	0,06W	for 150W only	

RESISTORS

3109 ©	4822 117 13608	4,7Ω	5%	0,06W	for 75W only	
3110 ©	4822 117 13632	100kΩ	1%	0,06W		
3111 ©	4822 051 30109	10Ω	5%	0,06W	for 150W only	
3111 ©	4822 117 12917	1Ω	5%	0,06W	for 75W only	
3112 ©	4822 117 12925	47kΩ	1%	0,06W		
3113 ©	4822 051 30223	22kΩ	5%	0,06W		
3114 ©	4822 051 30472	4,7kΩ	5%	0,06W		
3115 ©	4822 051 30102	1kΩ	5%	0,06W		
3116 ©	4822 051 30474	470kΩ	5%	0,06W		
3117 ©	4822 117 12903	1,8kΩ	1%	0,06W		
3119 ©	4822 051 30103	10kΩ	5%	0,06W	for 150W only	
3119 ©	4822 051 30153	15kΩ	5%	0,06W	for 75W only	
3120 ©	4822 051 30472	4,7kΩ	5%	0,06W		
3121 ©	4822 051 30472	4,7kΩ	5%	0,06W		
3122 ©	4822 051 30153	15kΩ	5%	0,06W		
3125 ©	4822 051 30102	1kΩ	5%	0,06W		
3126 ©	4822 051 30103	10kΩ	5%	0,06W		
3127 ©	4822 051 30103	10kΩ	5%	0,06W		
3129 ©	4822 051 30102	1kΩ	5%	0,06W		
3130 ©	2122 118 06085	0,033Ω	5%	1W	for 150W only	
3130 ©	2122 118 06235	0,047Ω	5%	1W	for 75W only	
3133 ©	4822 051 30562	5,6kΩ	5%	0,06W		
3134 ©	4822 051 30331	330Ω	5%	0,06W		
3135 ©	4822 051 30101	100Ω	5%	0,06W	for 150W only	
3135 ©	4822 117 13608	4,7Ω	5%	0,06W	for 75W only	
3136 ©	4822 051 30472	4,7kΩ	5%	0,06W		
3137 ©	4822 051 30103	10kΩ	5%	0,06W		
3138 ©	4822 051 30103	10kΩ	5%	0,06W		
3139	4822 116 52226	560Ω	5%	0,5W	for 75W only	
3139	4822 116 83883	470Ω	5%	0,16W	for 150W only	
3140 ©	4822 051 30152	1,5kΩ	5%	0,06W	for 75W only	
3140 ©	4822 117 11817	1,2kΩ	1%	0,06W	for 150W only	
3142 ©	4822 117 11817	1,2kΩ	1%	0,06W		
3143 ©	4822 051 30102	1kΩ	5%	0,06W		
3144 ©	4822 051 30154	150kΩ	5%	0,06W		
3145 ©	4822 117 12139	22Ω	5%	0,06W		
3146 ©	4822 051 30152	1,5kΩ	5%	0,06W		
3147 ©	4822 051 30103	10kΩ	5%	0,06W		
3148 ©	4822 051 30183	18kΩ	5%	0,06W		
3149 ©	4822 051 30472	4,7kΩ	5%	0,06W		
3151 ©	4822 117 13632	100kΩ	1%	0,06W		
3152 ©	4822 051 30152	1,5kΩ	5%	0,06W	for 75W only	
3152 ©	4822 117 12903	1,8kΩ	1%	0,06W	for 150W only	
3153 ©	4822 051 30152	1,5kΩ	5%	0,06W	for 75W only	
3153 ©	4822 117 12903	1,8kΩ	1%	0,06W	for 150W only	
3154 ©	4822 051 30102	1kΩ	5%	0,06W		
3155 ©	4822 051 30472	4,7kΩ	5%	0,06W		
3156 ©	4822 051 30109	10Ω	5%	0,06W	for 150W only	
3156 ©	4822 117 12917	1Ω	5%	0,06W	for 75W only	
3201 ©	4822 117 12925	47kΩ	1%	0,06W		
3202 ©	4822 051 30109	10Ω	5%	0,06W	for 150W only	
3202 ©	4822 117 12917	1Ω	5%	0,06W	for 75W only	
3203 ©	4822 051 30223	22kΩ	5%	0,06W		
3205 ©	2122 118 06085	0,033Ω	5%	1W	for 150W only	
3205 ©	2122 118 06235	0,047Ω	5%	1W	for 75W only	
3207 ©	4822 051 30474	470kΩ	5%	0,06W		
3209 ©	4822 051 30102	1kΩ	5%	0,06W		
3210 ©	4822 051 30472	4,7kΩ	5%	0,06W		
3211 ©	4822 051 30102	1kΩ	5%	0,06W		
3212 ©	4822 051 30472	4,7kΩ	5%	0,06W		
3213 ©	4822 051 30102	1kΩ	5%	0,06W		
3215 ©	4822 051 30101	100Ω	5%	0,06W	for 150W only	
3215 ©	4822 117 13608	4,7Ω	5%	0,06W	for 75W only	
3216 ©	4822 051 30223	22kΩ	5%	0,06W		

RESISTORS

3217 ©	4822 117 13632	100kΩ	1%	0,06W		
3218 ©	4822 051 30472	4,7kΩ	5%	0,06W		
3221 ©	4822 051 30103	10kΩ	5%	0,06W		
3225 ©	4822 117 12903	1,8kΩ	1%	0,06W		
3227 ©	4822 051 30103	10kΩ	5%	0,06W		
3228 ©	4822 051 30103	10kΩ	5%	0,06W	for 150W only	
3228 ©	4822 051 30153	15kΩ	5%	0,06W	for 75W only	
3229 ©	4822 051 30103	10kΩ	5%	0,06W		
3231 ©	4822 051 30472	4,7kΩ	5%	0,06W		
3232 ©	4822 051 30153	15kΩ	5%	0,06W		
3236 ©	4822 117 12139	22Ω	5%	0,06W		
3237 ©	4822 051 30103	10kΩ	5%	0,06W		
3240 ©	4822 051 30103	10kΩ	5%	0,06W		
3241 ©	4822 051 30102	1kΩ	5%	0,06W		
3243 ©	2122 118 06085	0,033Ω	5%	1W	for 150W only	
3243 ©	2122 118 06235	0,047Ω	5%	1W	for 75W only	
3245 ©	4822 051 30562	5,6kΩ	5%	0,06W		
3246 ©	4822 051 30331	330Ω	5%	0,06W		
3247 ©	4822 051 30101	100Ω	5%	0,06W	for 150W only	
3247 ©	4822 117 13608	4,7Ω	5%	0,06W	for 75W only	
3248 ©	4822 051 30472	4,7kΩ	5%	0,06W		
3251	4822 116 52226	560Ω	5%	0,5W	for 75W only	
3251	4822 116 83883	470Ω	5%	0,16W	for 150W only	
3252 ©	4822 051 30152	1,5kΩ	5%	0,06W	for 75W only	
3252 ©	4822 117 11817	1,2kΩ	1%	0,06W	for 150W only	
3253 ©	4822 117 11817	1,2kΩ	1%	0,06W		
3254 ©	4822 051 30154	150kΩ	5%	0,06W		
3255 ©	4822 051 30102	1kΩ	5%	0,06W		
3256 ©	4822 051 30152	1,5kΩ	5%	0,06W		
3258 ©	4822 051 30183	18kΩ	5%	0,06W		
3259 ©	4822 051 30472	4,7kΩ	5%	0,06W		
3261 ©	4822 051 30152	1,5kΩ	5%	0,06W		
3262 ©	4822 051 30101	100Ω	5%	0,06W		
3263 ©	4822 051 30103	10kΩ	5%	0,06W		
3264 ©	4822 117 13632	100kΩ	1%	0,06W		
3265 ©	4822 051 30152	1,5kΩ	5%	0,06W	for 75W only	
3265 ©	4822 117 12903	1,8kΩ	1%	0,06W	for 150W only	
3266 ©	4822 051 30152	1,5kΩ	5%	0,06W	for 75W only	
3266 ©	4822 117 12903	1,8kΩ	1%	0,06W	for 150W only	
3267 ©	4822 051 30102	1kΩ	5%	0,06W		
3268 ©	4822 051 30472	4,7kΩ	5%	0,06W		
3269 ©	4822 051 30109	10Ω	5%	0,06W	for 150W only	
3269 ©	4822 117 12917	1Ω	5%	0,06W	for 75W only	
3302 ©	4822 117 13632	100kΩ	1%	0,06W		
3303 ©	4822 051 30103	10kΩ	5%	0,06W		
3304	4822 116 52186	22Ω	5%	0,5W		
3305 ©	4822 051 30682	6,8kΩ	5%	0,06W		
3306	2120 368 90125	47kΩ	TRIMPOT.			
3307	2120 368 90125	47kΩ	TRIMPOT.			
3311 ©	4822 051 30103	10kΩ	5%	0,06W		
3312 ©	4822 117 13632	100kΩ	1%	0,06W		
3313 ©	4822 051 30221	220Ω	5%	0,06W		
3314 ©	4822 117 12925	47kΩ	1%	0,06W		
3315	4822 050 11002	1kΩ	5%	0,2W		
3316 ©	4822 051 30273	27kΩ	5%	0,06W		
3317 ©	4822 051 30333	33kΩ	5%	0,06W		
3318 ©	4822 117 13632	100kΩ	1%	0,06W		
3319 ©	4822 051 30222	2,2kΩ	5%	0,06W		
3320 ©	4822 051 30103	10kΩ	5%	0,06W		
3321 ©	4822 051 30102	1kΩ	5%	0,06W		
3322 ©	4822 051 30103	10kΩ	5%	0,06W		
3323 ©	4822 117 12968	820Ω	5%	0,06W		
3324 ©	4822 051 30105	1MΩ	5%	0,06W		
3325 ©	4822 051 30154	150kΩ	5%	0,06W		

RESISTORS

3326 ©	4822 051 30154	150kΩ	5%	0,06W		
3327 ▲	4822 052 10339	33Ω	5%	0,33W		NFR
3328 ©	5322 117 13056	8,2kΩ	1%	0,06W		
3329	4822 116 52256	2,2kΩ	5%	0,16W		
3330 ©	4822 051 30103	10kΩ	5%	0,06W		
3331 ©	4822 051 30103	10kΩ	5%	0,06W		
3332 ©	4822 051 30332	3,3kΩ	5%	0,06W		
3334 ©	4822 051 30102	1kΩ	5%	0,06W		
3336 ©	4822 051 30123	12kΩ	5%	0,06W		
3337 ©	4822 051 30331	330Ω	5%	0,06W		
3337 ©	4822 051 30471	470Ω	5%	0,06W	for 75W only	
3338 ©	4822 051 30102	1kΩ	5%	0,06W		
3339 ©	4822 051 30222	2,2kΩ	5%	0,06W		
3340 ©	4822 051 30331	330Ω	5%	0,06W		
3340 ©	4822 051 30471	470Ω	5%	0,06W	for 75W only	
3341 ©	4822 051 30682	6,8kΩ	5%	0,06W		
3342 ©	4822 051 30121	120Ω	5%	0,06W		
3343 ©	4822 051 30151	150Ω	5%	0,06W		
3344 ©	4822 051 30471	470Ω	5%	0,06W		
3345 ©	4822 051 30471	470Ω	5%	0,06W		
3346 ©	4822 051 30479	47Ω	5%	0,06W		
3350 ©	4822 051 30472	4,7kΩ	5%	0,06W		
3400 ©	4822 051 30273	27kΩ	5%	0,06W		
3401 ©	4822 051 30471	470Ω	5%	0,06W		
3403 ©	4822 051 30273	27kΩ	5%	0,06W		
3404 ©	4822 051 30682	6,8kΩ	5%	0,06W		
3405 ©	4822 051 30472	4,7kΩ	5%	0,06W		
3406 ▲	4822 052 10109	10Ω	5%	0,33W		NFR
3407 ©	4822 051 30472	4,7kΩ	5%	0,06W		
3408 ©	4822 051 30682	6,8kΩ	5%	0,06W		
3409 ©	4822 051 30273	27kΩ	5%	0,06W		
3411	4822 116 52283	4,7kΩ	5%	0,5W		
3412 ▲	4822 052 10568	5,6Ω	5%	0,33W		NFR
3413 ©	4822 051 30471	470Ω	5%	0,06W		
3415 ©	4822 051 30273	27kΩ	5%	0,06W		
3422 ©	4822 051 30472	4,7kΩ	5%	0,06W		
3423 ©	4822 051 30103	10kΩ	5%	0,06W		
3424 ©	4822 051 30103	10kΩ	5%	0,06W		
3425 ©	4822 051 30339	33Ω	5%	0,06W		
3426 ©	4822 051 30339	33Ω	5%	0,06W		
3427 ©	4822 051 30103	10kΩ	5%	0,06W		
3428 ©	4822 051 30103	10kΩ	5%	0,06W		
3429 ©	4822 051 30339	33Ω	5%	0,06W		
3430 ©	4822 051 30339	33Ω	5%	0,06W		
3431 ©	4822 051 30102	1kΩ	5%	0,06W		
3432 ©	4822 051 30102	1kΩ	5%	0,06W		
3433 ©	4822 051 30102	1kΩ	5%	0,06W		
3434 ©	4822 051 30222	2,2kΩ	5%	0,06W		
3435 ©	4822 051 30271	270Ω	5%	0,06W		
3436 ©	4822 051 30472	4,7kΩ	5%	0,06W		
3437 ©	4822 051 30562	5,6kΩ	5%	0,06W		
3438 ©	4822 051 30103	10kΩ	5%	0,06W		
3439 ©	4822 051 30103	10kΩ	5%	0,06W		
3440	4822 116 80176	1Ω	5%	0,5W		
3500 ©	4822 051 30152	1,5kΩ	5%	0,06W		
3501 ©	4822 051 30472	4,7kΩ	5%	0,06W		
3501 ©	4822 117 12917	1Ω	5%	0,06W		
3502 ©	4822 051 30472	4,7kΩ	5%	0,06W		
3502 ©	4822 117 12917	1Ω	5%	0,06W		
3504 ©	4822 051 30103	10kΩ	5%	0,06W		
3506 ©	4822 051 30471	470Ω	5%	0,06W		
3507 ©	4822 051 30562	5,6kΩ	5%	0,06W	for 75W only	
3507 ©	5322 117 13056	8,2kΩ	1%	0,06W		
3508 ©	4822 051 30222	2,2kΩ	5%	0,06W		

ELECTRICAL PARTSLIST *POWER 2003 75&150W Class-D* ***COMBI BOARD***

RESISTORS

3509 ©	4822 051 30222	2,2kΩ	5%	0,06W		
3510 ©	4822 051 30682	6,8kΩ	5%	0,06W	for 150W and 75W SA	
3510 ©	4822 051 30223	22kΩ	5%	0,06W	for 75W TAPE only	
3511 ©	4822 051 30682	6,8kΩ	5%	0,06W	for 150W and 75W SA	
3511 ©	4822 051 30223	22kΩ	5%	0,06W	for 75W TAPE only	
3514 ©	4822 051 30153	15kΩ	5%	0,06W		
3518 ©	4822 051 30152	1,5kΩ	5%	0,06W		
3519 ©	4822 051 30103	10kΩ	5%	0,06W		
3520 ©	4822 051 30153	15kΩ	5%	0,06W		
3522 ©	4822 051 30152	1,5kΩ	5%	0,06W		
3523 ©	4822 051 30152	1,5kΩ	5%	0,06W		
3524 ©	4822 117 11817	1,2kΩ	1%	0,06W		
3525 ©	4822 051 30102	1kΩ	5%	0,06W		
3525 ©	4822 051 30273	27kΩ	5%	0,06W		
3526 ©	4822 051 30334	330kΩ	5%	0,06W		
3527 ©	4822 051 30102	1kΩ	5%	0,06W		
3527 ©	4822 051 30273	27kΩ	5%	0,06W		
3529 ©	482 2 051 30154	150kΩ	5%	0,06W		
3531 ©	4822 051 30154	150kΩ	5%	0,06W		
3532 ©	4822 117 12864	82kΩ	5%	0,06W		
3533 ©	4822 051 30562	5,6kΩ	5%	0,06W		
3534 ▲	4822 052 10109	10Ω	5%	0,33W		NFR
3535 ©	4822 051 30562	5,6kΩ	5%	0,06W		
3536 ©	4822 051 30223	22kΩ	5%	0,06W	for 150W and 75W SA	
3536 ©	4822 051 30102	1kΩ	5%	0,06W	for 75W TAPE only	
3539 ©	4822 051 30153	15kΩ	5%	0,06W		
3542 ©	4822 051 30123	12kΩ	5%	0,06W		
3543 ©	5322 117 13056	8,2kΩ	1%	0,06W		
3544 ©	4822 051 30562	5,6kΩ	5%	0,06W		
3545 ©	4822 051 30393	39kΩ	5%	0,06W		
3549 ©	4822 051 30101	100Ω	5%	0,06W		
3550 ©	4822 051 30393	39kΩ	5%	0,06W		
3551 ©	4822 051 30101	100Ω	5%	0,06W		
3552 ©	4822 051 30101	100Ω	5%	0,06W		
3553 ©	4822 051 30101	100Ω	5%	0,06W		
3554 ©	4822 051 30101	100Ω	5%	0,06W		
3555 ©	4822 051 30562	5,6kΩ	5%	0,06W		
3556 ©	4822 051 30153	15kΩ	5%	0,06W		
3557 ©	4822 051 30101	100Ω	5%	0,06W		
3558 ©	4822 117 12903	1,8kΩ	1%	0,06W		
3559 ©	4822 117 12903	1,8kΩ	1%	0,06W		
3560 ©	4822 051 30101	100Ω	5%	0,06W		
3561 ©	4822 051 30102	1kΩ	5%	0,06W		
3562 ©	4822 051 30102	1kΩ	5%	0,06W		
3563 ©	4822 051 30101	100Ω	5%	0,06W		
3564 ©	4822 051 30101	100Ω	5%	0,06W		
3566 ©	4822 051 30101	100Ω	5%	0,06W		
3567 ©	4822 051 30101	100Ω	5%	0,06W		
3568 ©	4822 051 30101	100Ω	5%	0,06W		
3569 ©	4822 051 30102	1kΩ	5%	0,06W		
3570 ©	4822 117 13632	100kΩ	1%	0,06W		
3571 ©	4822 051 30223	22kΩ	5%	0,06W	for 150W and 75W SA	
3571 ©	4822 051 30102	1kΩ	5%	0,06W	for 75W TAPE only	
3572	4822 116 83883	470Ω	5%	0,16W		
3573	4822 116 83883	470Ω	5%	0,16W		
3574 ©	4822 051 30101	100Ω	5%	0,06W		
3575 ©	4822 051 30562	5,6kΩ	5%	0,06W		
3576 ©	4822 051 30123	12kΩ	5%	0,06W		
3577 ©	4822 051 30153	15kΩ	5%	0,06W		
3578 ©	5322 117 13056	8,2kΩ	1%	0,06W		
3579 ©	4822 051 30562	5,6kΩ	5%	0,06W		
3580 ©	4822 051 30101	100Ω	5%	0,06W		
3581 ©	4822 051 30101	100Ω	5%	0,06W		

RESISTORS

3591 ©	4822 051 30102	1kΩ	5%	0,06W	for 75W only	
3591 ©	4822 051 30332	3,3kΩ	5%	0,06W	for 150W only	
4211 ©	4822 051 20008	CHIP JUMPER 0805				
4212 ©	4822 051 20008	CHIP JUMPER 0805				
4213 ©	4822 051 30008	CHIP JUMPER 0603				
4214 ©	4822 051 20008	CHIP JUMPER 0805				
4216 ©	4822 051 30008	CHIP JUMPER 0603				
4217 ©	4822 051 30008	CHIP JUMPER 0603				
4223 ©	4822 051 30008	CHIP JUMPER 0603				
4226 ©	4822 051 30008	CHIP JUMPER 0603				
4230 ©	4822 051 30008	CHIP JUMPER 0603				
4232 ©	4822 051 20008	CHIP JUMPER 0805				
4233 ©	4822 051 30008	CHIP JUMPER 0603				
4235 ©	4822 051 30008	CHIP JUMPER 0603				
4240 ©	4822 051 20008	CHIP JUMPER 0805				
4241 ©	4822 051 20008	CHIP JUMPER 0805				
4245 ©	4822 051 30008	CHIP JUMPER 0603				
4253 ©	4822 051 30008	CHIP JUMPER 0603				
4260 ©	4822 051 20008	CHIP JUMPER 0805				
4265 ©	4822 051 30008	CHIP JUMPER 0603				
4272 ©	4822 051 30008	CHIP JUMPER 0603				
4273 ©	4822 051 30008	CHIP JUMPER 0603				
4274 ©	4822 051 30008	CHIP JUMPER 0603				
4276 ©	4822 051 30008	CHIP JUMPER 0603				
4277 ©	4822 051 30008	CHIP JUMPER 0603				
4279 ©	4822 051 30008	CHIP JUMPER 0603				
4280 ©	4822 051 20008	CHIP JUMPER 0805				
4281 ©	4822 051 30008	CHIP JUMPER 0603				
4282 ©	4822 051 20008	CHIP JUMPER 0805				
4283 ©	4822 051 30008	CHIP JUMPER 0603				
4286 ©	4822 051 30008	CHIP JUMPER 0603				
4287 ©	4822 051 30008	CHIP JUMPER 0603				
4289 ©	4822 051 30008	CHIP JUMPER 0603				
4290 ©	4822 051 30008	CHIP JUMPER 0603				
4301 ©	4822 051 30008	CHIP JUMPER 0603				

COILS

5100	4822 157 11411	FERRITE BEAD	
5101	2422 536 00612	30µH	for 75W only
5102	2422 549 44944	Mains Filter 330µH 3A	
5103	4822 157 11411	FERRITE BEAD	
5105	2422 536 00686	20µH	for 150W only
5200	4822 157 11411	FERRITE BEAD	
5201	2422 536 00612	30µH	for 75W only
5202	2422 549 44944	Mains Filter 330µH 3A	
5203	4822 157 11411	FERRITE BEAD	
5204	2422 536 00686	20µH	for 150W only
5300	2422 540 98542	Resonator 500kHz	
5302	2422 540 98561	Resonator 425kHz	
5303	4822 157 11411	FERRITE BEAD	

DIODES

6104 ©	4822 130 11397	BAS316	
6106 ©	4822 130 11416	PDZ6.8B	
6108 ©	4822 130 11416	PDZ6.8B	
6109 ©	4822 130 11397	BAS316	
6110 ©	4822 130 10328	BAV99W	
6111 ©	4822 130 11397	BAS316	
6113 ©	4822 130 10328	BAV99W	
6114 ©	4822 130 10328	BAV99W	
6202 ©	4822 130 11397	BAS316	
6205 ©	4822 130 10328	BAV99W	
6206 ©	4822 130 10328	BAV99W	
6208 ©	4822 130 10328	BAV99W	

11-16

ELECTRICAL PARTSLIST *POWER 2003 75&150W Class-D* ***COMBI BOARD***

DIODES

6210 ©	4822 130 10328	BAV99W	
6211 ©	4822 130 10328	BAV99W	
6212 ©	4822 130 11416	PDZ6.8B	
6213 ©	4822 130 11416	PDZ6.8B	
6214 ©	4822 130 11397	BAS316	
6216	4822 130 30621	1N4148	
6217 ©	4822 130 11397	BAS316	
6300 ©	4822 130 10838	UDZ3.3B	
6401	4822 130 30621	1N4148	
6403 ©	4822 130 10838	UDZ3.3B	
6404 ©	4822 130 11397	BAS316	
6500	4822 130 61219	BZX79-C10	
6501 ©	9322 102 64685	UDZ-2,7B	
6502 ©	4822 130 11397	BAS316	
6503 ©	4822 130 11397	BAS316	
6504 ©	4822 130 11397	BAS316	
6505 ©	4822 130 11397	BAS316	
6506 ©	9322 150 18685	BZX384-C47	
6507 ©	9322 150 18685	BZX384-C47	
6508 ©	3198 020 55680	BZX384-C5V6	

TRANSISTORS

7104 ©	4822 130 60373	BC856B	
7109 ▲	9322 173 29687	STP14NF12FP, FET POWER	for 75W only
7109 ▲	9340 578 15127	PHX18NQ11T, FET POWER	for 150W only
7110 ©	3198 010 42310	BC847BW	
7111 ©	3198 010 44350	BC807-25W	
7112 ©	3198 010 42320	BC857BW	
7113 ©	3198 010 44350	BC807-25W	
7114 ©	9340 219 30115	BC817-25W	
7115 ©	9340 219 30115	BC817-25W	
7117 © ▲	9337 760 90215	PMBTA42	
7119 © ▲	9337 760 90215	PMBTA42	
7121 ▲	9322 173 29687	STP14NF12FP, FET POWER	for 75W only
7121 ▲	9340 578 15127	PHX18NQ11T, FET POWER	for 150W only
7128 ©	4822 130 60373	BC856B	
7129 ©	4822 130 60373	BC856B	
7130 ©	3198 010 42310	BC847BW	
7131 ©	5322 130 60159	BC846B	
7132 ©	9340 219 30115	BC817-25W	for 150W only
7133 ©	9340 219 30115	BC817-25W	for 150W only
7203 ©	3198 010 42310	BC847BW	
7208 ©	4822 130 60373	BC856B	
7210 ©	3198 010 44350	BC807-25W	
7211 ©	3198 010 42320	BC857BW	
7218 ▲	9322 173 29687	STP14NF12FP, FET POWER	for 75W only
7218 ▲	9340 578 15127	PHX18NQ11T, FET POWER	for 150W only
7221 ©	3198 010 44350	BC807-25W	
7222 ©	9340 219 30115	BC817-25W	
7223 ©	9340 219 30115	BC817-25W	
7227 © ▲	9337 760 90215	PMBTA42	
7228 © ▲	9337 760 90215	PMBTA42	
7231 ▲	9322 173 29687	STP14NF12FP, FET POWER	for 75W only
7231 ▲	9340 578 15127	PHX18NQ11T, FET POWER	for 150W only
7238 ©	5322 130 60159	BC846B	
7239 ©	4822 130 60373	BC856B	
7240 ©	4822 130 60373	BC856B	
7243 ©	9340 219 30115	BC817-25W	
7244 ©	9340 219 30115	BC817-25W	for 150W only
7245 ©	9340 219 30115	BC817-25W	for 150W only
7309 ©	3198 010 42310	BC847BW	
7316 ©	3198 010 42320	BC857BW	
7317 ©	3198 010 42310	BC847BW	
7319 ©	3198 010 42310	BC847BW	

TRANSISTORS

7323 ©	9340 219 30115	BC817-25W	
7324 ©	9340 219 30115	BC817-25W	
7402	4822 130 40855	BC337-40	
7405 ©	3198 010 42320	BC857BW	
7407 ©	9340 219 30115	BC817-25W	
7408 ©	9340 219 30115	BC817-25W	
7409 ©	9340 219 30115	BC817-25W	
7410 ©	3198 010 42320	BC857BW	
7411 ©	3198 010 44350	BC807-25W	
7505 ©	3198 010 42310	BC847BW	
7506 ©	3198 010 42320	BC857BW	
7509 ©	3198 010 42310	BC847BW	

INTEGRATED CIRCUITS

7105 ©	9350 694 90118	74LV14D
7118 ©	9350 694 90118	74LV14D
7122 ©	5322 209 11517	PC74HCU04T, HEX INVERTER IC
7209 ©	9350 694 90118	74LV14D
7232 ©	5322 209 11517	PC74HCU04T, HEX INVERTER IC
7235 ©	9350 694 90118	74LV14D
7311	4822 209 14933	TL431IZ, PROGRAMMABLE VOLT.REF
7312 ©	5322 209 11517	PC74HCU04T, HEX INVERTER IC
7315	4822 209 81351	LM317MPTB
7320 ©	4822 209 83357	NJM4560M
7321	4822 209 81351	LM317MPTB
7400 ©	4822 209 31378	NJM4556M, 2-FOLD OP-AMP.
7406 ©	4822 209 17345	M62320FP, I2C SHIFT REGISTER
7508 ©	9322 150 74668	TDA7468D, SOURCE SEL. & SOUND

Note:
Components printed in grey colour are considered as standard spareparts and thus not available on service stock.
Code numbers are published for orientation only.

12-1

EXPLODED VIEW / drawing 1

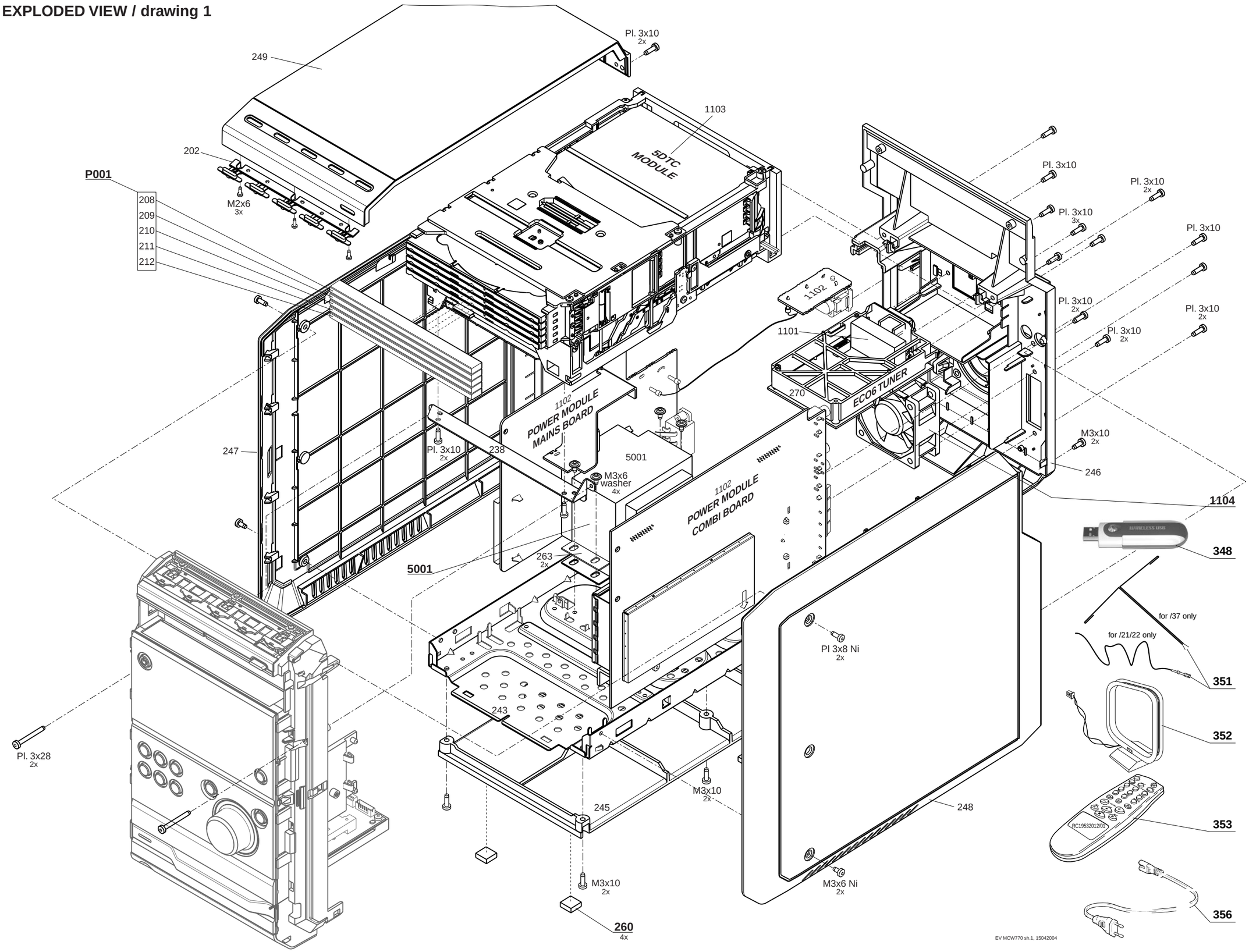

12-2

EXPLODED VIEW / drawing 2

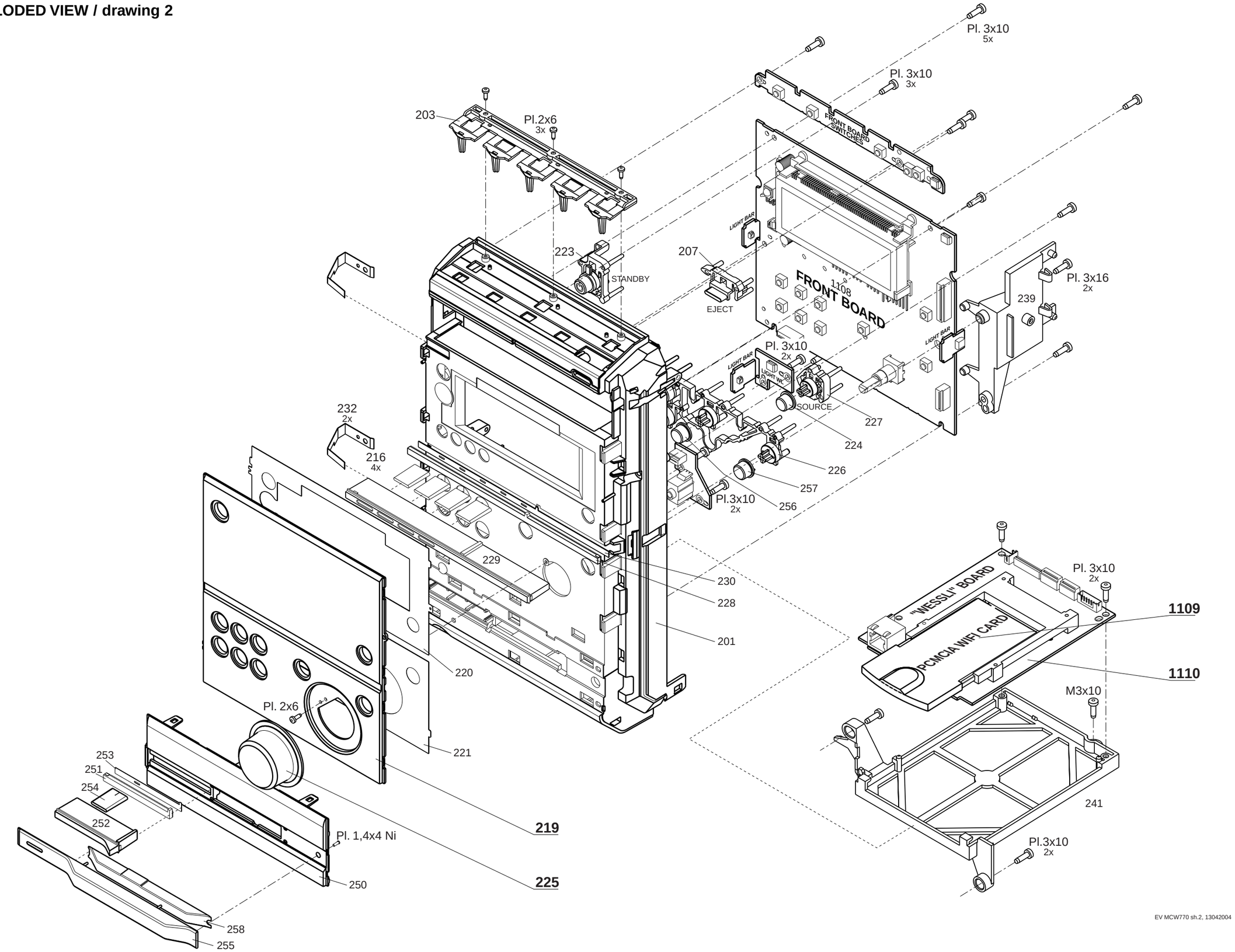

MECHANICAL PARTSLIST & ACCESSORIES

MECHANICAL PARTS

219	3103 308 15151	DISPLAY WINDOW	
225	3103 308 15322	KNOB, VOLUME	
260	3139 113 27140	FOOT RUBBER 4MM	
P001	3141 079 00781	ORNAMENT. COVERS, TRAY MCW770	

MISCELLANEOUS

345-1	9965 000 25100	SPEAKER BOX (L)	
345-2	9965 000 25146	SPEAKER BOX (R)	
348	2822 062 41032	WL USB STICK, B-220 US	for /37 only
348	2822 062 41034	WL USB STICK, B-220 EU	for /21/22 only
351	2422 076 00546	FM ANTENNA WIRE	for /21/22 only
351	4822 320 11094	FM DIPOLE ANTENNA	for /37 only
352	2422 549 45067	AM Loop Antenna	
353	3139 238 08491	RC19532014/01, REMOTE CONTROL	
356	2422 070 98151	MAINS CORD, EUROPE	for /21/22 only
356	2422 070 98246	MAINS CORD, UL	for /37 only
1101	3103 308 64260	TUNER BOARD ECO6 AS /01	for /21/22 only
1101	3103 308 64281	TUNER BOARD EC06 AS /17	for /37 only
1104	2822 031 01494	FAN 12VDC 0.8W 3100RPM B	
1109	2822 062 41028	PCMCIA WIFI CARD, US	for /37 only
1109	2822 062 41031	PCMCIA WIFI CARD, EURO	for /21/22 only
1110	3103 308 67861	„WESSLI“ BOARD ASSY	
5001	3103 308 30870	Mains Transformer /37	
5001	3103 308 30880	Mains Transformer /22	
5001	3103 308 30890	Mains Transformer /21	
8001	4822 320 12752	FLEXFOIL CABLE, 7P, 180mm AD	
8003	3139 111 02551	FLEXFOIL CABLE, 15P,480mm BD	
8004	3139 111 02541	FLEXFOIL CABLE, 8P, 280mm AD	
8005	4822 320 12654	FLEXFOIL CABLE, 7P, 220mm AD	
8006	3139 110 35050	FLEXFOIL CABLE, 8P, 220mm AD	
8007	3139 110 34780	FLEXFOIL CABLE, 4P, 280mm BD	
8008	3139 111 02371	FLEXFOIL CABLE, 19P, 180mm AD	
8009	4822 320 12604	FLEXFOIL CABLE, 9P, 220mm AD	
8011	3103 308 94061	FLATFOIL CABLE, 4P, 128mm BD	
8015	3103 308 94071	FLATFOIL CABLE, 4P, 88mm AD	
8016	3103 308 94071	FLATFOIL CABLE, 4P, 88mm AD	
8017	3103 308 94081	FLATFOIL CABLE, 4P, 75mm AD	
8018	3103 308 94081	FLATFOIL CABLE, 4P, 75mm AD	

Note:
Components printed in grey colour are considered as standard spareparts and thus not available on service stock.
Code numbers are published for orientation only.

ELECTRICAL PARTSLIST ***FRONT BOARD*** *(inclusive Headphone Board, CD Key Board and Lightbar Boards)*

Note:
Components printed in grey colour are considered as standard spareparts and thus not available on service stock.
Code numbers are published for orientation only.

MISCELLANEOUS

1400	2422 025 14518	FFC-CONNECTOR, 9P, TOP ENTRY
1403	4822 265 11553	FFC-CONNECTOR, 19P, TOP ENTRY
1404	2422 025 16979	FFC-CONNECTOR 4P, SIDE ENTRY
1405	4822 265 11515	FFC-CONNECTOR, 8P, TOP ENTRY
1415	2422 025 16727	FFC-CONNECTOR, 4P, TOP ENTRY
1417	4822 276 13114	TACT SWITCH
1418	2422 025 16727	FFC-CONNECTOR, 4P, TOP ENTRY
1419	4822 276 13114	TACT SWITCH
1423	4822 276 13114	TACT SWITCH
1425	2422 129 16708	ROTARY ENCODER
1429	4822 276 13114	TACT SWITCH
1431	4822 276 13114	TACT SWITCH
1432	4822 276 13114	TACT SWITCH
1433	4822 276 13114	TACT SWITCH
1434	4822 276 13114	TACT SWITCH
1435	4822 276 13114	TACT SWITCH
1437	4822 276 13114	TACT SWITCH
1445	2422 025 16979	FFC-CONNECTOR 4P, SIDE ENTRY
1448	2422 026 05059	HEADPHONE SOCKET, 3,5mm, JACK
1449	4822 267 10733	FFC CONNECTOR, 4P, TOP ENTRY
1450	2422 025 16979	FFC-CONNECTOR 4P, SIDE ENTRY
1451	4822 276 13114	TACT SWITCH
1452	4822 276 13114	TACT SWITCH
1454	4822 276 13114	TACT SWITCH
1456	4822 276 13114	TACT SWITCH
1458	4822 276 13114	TACT SWITCH
1460	4822 276 13114	TACT SWITCH
1461	2422 025 16979	FFC-CONNECTOR 4P, SIDE ENTRY
1462	2422 025 16979	FFC-CONNECTOR 4P, SIDE ENTRY
1463	2422 025 16979	FFC-CONNECTOR 4P, SIDE ENTRY
7402	3103 308 55521	DISPLAY MCW770
7405	9322 185 97667	TSOP4836ZC1, IR EYE

CAPACITORS

2402	3198 029 51090	10µF	20%	50V	
2403	3198 029 51090	10µF	20%	50V	
2406 ©	3198 016 34790	47pF	5%	50V	
2407 ©	3198 016 34790	47pF	5%	50V	
2408 ©	3198 016 34790	47pF	5%	50V	
2409 ©	3198 016 34790	47pF	5%	50V	
2415 ©	3198 017 31040	100nF	10%	16V	
2417	3198 028 54770	0,47µF	20%	50V	
2420 ©	3198 016 31590	15pF	5%	50V	
2421 ©	3198 017 31030	10nF	10%	50V	
2423 ©	3198 016 31590	15pF	5%	50V	
2425	3198 028 12210	220µF	20%	10V	
2426	3198 028 24790	47µ	20%	16V	
2427 ©	3198 017 31040	100nF	10%	16V	
2428	3198 028 12210	220µF	20%	10V	
2429 ©	3198 017 32220	2,2nF	10%	50V	
2430 ©	3198 016 31020	1nF	5%	25V	
2431 ©	3198 017 31040	100nF	10%	16V	for /22 only
2432 ©	3198 017 31040	100nF	10%	16V	
2433 ©	3198 016 34790	47pF	5%	50V	

CAPACITORS

2434 ©	3198 016 34790	47pF	5%	50V	for /22 only
2435 ©	3198 016 35610	47pF	5%	50V	for /22 only
2436 ©	3198 016 34790	47pF	5%	50V	
2437	3198 025 52280	2,2µF	20%	50V	for /22 only
2438 ©	3198 016 34790	47pF		50V	
2439 ©	3198 016 34790	47pF	5%	50V	
2440 ©	3198 016 34790	47pF	5%	50V	
2441 ©	3198 016 35610	47pF	5%	50V	for /22 only
2442 ©	3198 016 34790	47pF	5%	50V	for /22 only
2443 ©	3198 016 34790	47pF	5%	50V	for /22 only
2444 ©	3198 016 34790	47pF	5%	50V	for /22 only
2445 ©	3198 016 34790	47pF	5%	50V	for /22 only
2446 ©	2020 552 96664	33pF	2%	50V	
2447 ©	3198 016 32290	22pF	5%	50V	
2448 ©	3198 016 32290	22pF	5%	50V	
2449 ©	3198 016 32280	2,2pF	10%	50V	
2450 ©	3198 016 34710	470pF	5%	50V	
2451	3198 028 21090	10µF	20%	16V	for /22 only
2470	3198 028 24790	47µ	20%	16V	
2471 ©	3198 017 31040	100nF	10%	16V	
2472	3198 029 51080	1µF	20%	50V	
2473	3198 028 21010	100µF	20%	16V	
2474 ©	3198 017 42240	220nF	20%	16V	
2475 ©	3198 016 31010	100pF	5%	50V	
2476 ©	3198 016 31010	100pF	5%	50V	
2477 ©	3198 016 31010	100pF	5%	50V	
2478 ©	3198 016 31010	100pF	5%	50V	
2479	3198 028 21010	100µF	20%	16V	
2481 ©	3198 017 31030	10nF	5%	50V	
2482 ©	3198 017 31030	10nF	5%	50V	
2497 ©	3198 017 32230	22nF	10%	25V	
2498 ©	3198 023 41040	100nF	10%	25V	
2499 ©	3198 017 32230	22nF	10%	25V	

RESISTORS

3400 ⚠©	4822 051 30479	47Ω	5%	0,06W
3401 ©	3198 021 32230	22kΩ	5%	0,06W
3402 ⚠©	4822 051 30479	47Ω	5%	0,06W
3403 ©	3198 021 38230	82kΩ	5%	0,06W
3404 ©	3198 021 34710	470Ω	5%	0,06W
3405 ©	3198 021 38230	82kΩ	5%	0,06W
3406 ©	3198 021 34710	470Ω	5%	0,06W
3407 ©	3198 021 38210	820Ω	5%	0,06W
3408 ©	3198 021 31030	10kΩ	5%	0,06W
3409 ©	3198 021 31030	10kΩ	5%	0,06W
3410 ©	3198 021 31030	10kΩ	5%	0,06W
3411 ©	3198 021 31030	10kΩ	5%	0,06W
3412 ©	3198 021 32210	220Ω	5%	0,06W
3413 ©	3198 021 32210	220Ω	5%	0,06W
3414 ©	3198 021 32210	220Ω	5%	0,06W
3415 ©	3198 021 32210	220Ω	5%	0,06W
3416 ©	3198 021 32210	220Ω	5%	0,06W
3417 ©	3198 021 32210	220Ω	5%	0,06W
3418 ©	3198 021 32210	220Ω	5%	0,06W
3419 ©	3198 021 32210	220Ω	5%	0,06W
3420 ©	3198 021 32210	220Ω	5%	0,06W
3421 ©	3198 021 32210	220Ω	5%	0,06W
3422 ©	3198 021 32210	220Ω	5%	0,06W
3423 ©	3198 021 32210	220Ω	5%	0,06W
3424 ©	3198 021 32210	220Ω	5%	0,06W
3425 ©	3198 021 31020	1kΩ	5%	0,06W
3426 ©	3198 021 31030	10kΩ	5%	0,06W

ELECTRICAL PARTSLIST ***FRONT BOARD*** *(inclusive Headphone Board, CD Key Board and Lightbar Boards)*

RESISTORS

3427©	3198 021 31020	1kΩ	5%	0,06W	
3428©	3198 021 34710	470Ω	5%	0,06W	
3429©	3198 021 32210	220Ω	5%	0,06W	
3430©	3198 021 32210	220Ω	5%	0,06W	
3431©	3198 021 32210	220Ω	5%	0,06W	
3432©	3198 021 32210	220Ω	5%	0,06W	
3433©	3198 021 32210	220Ω	5%	0,06W	
3434©	3198 021 32210	220Ω	5%	0,06W	
3435©	3198 021 32210	220Ω	5%	0,06W	
3436©	3198 021 32210	220Ω	5%	0,06W	
3437©	3198 021 32210	220Ω	5%	0,06W	
3438©	3198 021 32210	220Ω	5%	0,06W	
3439©	3198 021 32210	220Ω	5%	0,06W	
3440©	3198 021 32210	220Ω	5%	0,06W	
3441©	3198 021 32210	220Ω	5%	0,06W	
3442	3198 011 04790	47Ω	5%	0,16W	for /22 only
3443©	3198 021 31020	1kΩ	5%	0,06W	
3444©	3198 021 31020	1kΩ	5%	0,06W	
3445©	3198 021 31020	1kΩ	5%	0,06W	
3446©	3198 021 31030	10kΩ	5%	0,06W	
3447©	3198 021 34710	470Ω	5%	0,06W	
3448©	3198 021 32210	220Ω	5%	0,06W	
3449©	3198 021 31520	1,5kΩ	5%	0,06W	
3450©	3198 021 32210	220Ω	5%	0,06W	
3451©	3198 021 31520	1,5kΩ	5%	0,06W	
3452©	3198 021 32210	220Ω	5%	0,06W	
3453©	3198 021 31520	1,5kΩ	5%	0,06W	
3454©	3198 021 32210	220Ω	5%	0,06W	
3455©	3198 021 31520	1,5kΩ	5%	0,06W	
3456©	3198 021 32210	220Ω	5%	0,06W	
3457©	3198 021 31020	1kΩ	5%	0,06W	
3458©	3198 021 32210	220Ω	5%	0,06W	
3459©	3198 021 32210	220Ω	5%	0,06W	
3460©	3198 021 32210	220Ω	5%	0,06W	
3461©	3198 021 31020	1kΩ	5%	0,06W	
3462©	3198 021 32210	220Ω	5%	0,06W	
3463©	3198 021 32210	220Ω	5%	0,06W	
3464©	3198 021 32210	220Ω	5%	0,06W	
3465©	3198 021 32240	220kΩ	5%	0,06W	
3466©	3198 021 32210	220Ω	5%	0,06W	
3467©	3198 021 32240	220kΩ	5%	0,06W	
3468©	3198 021 32210	220Ω	5%	0,06W	
3469©	3198 021 32210	220Ω	5%	0,06W	
3470©	3198 021 32210	220Ω	5%	0,06W	
3471©	3198 021 34710	470Ω	5%	0,06W	
3472©	3198 021 32210	220Ω	5%	0,06W	
3473©	3198 021 31020	1kΩ	5%	0,06W	
3474©	3198 021 31010	100Ω	5%	0,06W	
3475©	3198 021 31020	1kΩ	5%	0,06W	
3476 ⚠©	4822 117 13613	2,2Ω	5%	0,06W	
3477©	3198 021 31010	100Ω	5%	0,06W	
3478©	3198 021 31020	1kΩ	5%	0,06W	
3479©	3198 021 31010	100Ω	5%	0,06W	
3480©	3198 021 31010	100Ω	5%	0,06W	
3481©	3198 021 31010	100Ω	5%	0,06W	
3482©	3198 021 34710	470Ω	5%	0,06W	
3483©	3198 021 31030	10kΩ	5%	0,06W	
3484©	3198 021 31020	1kΩ	5%	0,06W	
3485©	3198 021 31020	1kΩ	5%	0,06W	
3486©	3198 021 31010	100Ω	5%	0,06W	
3487©	3198 021 31010	100Ω	5%	0,06W	
3488©	3198 021 31010	100Ω	5%	0,06W	
3489©	3198 021 31020	1kΩ	5%	0,06W	

RESISTORS

3491©	3198 021 31010	100Ω	5%	0,06W	
3490©	3198 021 31020	1kΩ	5%	0,06W	
3492©	3198 021 31020	1kΩ	5%	0,06W	
3493©	3198 021 31020	1kΩ	5%	0,06W	
3494©	3198 021 31020	1kΩ	5%	0,06W	
3495©	3198 021 31020	1kΩ	5%	0,06W	
3496©	3198 021 31020	1kΩ	5%	0,06W	
3497©	3198 021 31010	100Ω	5%	0,06W	
3499©	3198 021 34710	470Ω	5%	0,06W	
3500©	3198 021 31020	1kΩ	5%	0,06W	
3501©	3198 021 31020	1kΩ	5%	0,06W	
3502©	3198 021 31020	1kΩ	5%	0,06W	
3503©	3198 021 31010	100Ω	5%	0,06W	
3504©	3198 021 31010	100Ω	5%	0,06W	
3505©	3198 021 31010	100Ω	5%	0,06W	
3506©	3198 021 31020	1kΩ	5%	0,06W	
3507©	3198 021 31020	1kΩ	5%	0,06W	
3508©	3198 021 31020	1kΩ	5%	0,06W	
3509©	3198 021 31020	1kΩ	5%	0,06W	
3510©	3198 021 31020	1kΩ	5%	0,06W	
3511©	3198 021 34710	470Ω	5%	0,06W	
3512©	3198 021 31020	1kΩ	5%	0,06W	
3513©	3198 021 31020	1kΩ	5%	0,06W	
3514©	3198 021 31010	100Ω	5%	0,06W	
3515©	3198 021 34710	470Ω	5%	0,06W	
3516©	3198 021 34710	470Ω	5%	0,06W	
3517©	3198 021 31030	10kΩ	5%	0,06W	
3518©	3198 021 34710	470Ω	5%	0,06W	
3519©	3198 021 31030	10kΩ	5%	0,06W	
3520©	3198 021 34710	470Ω	5%	0,06W	
3521©	3198 021 34710	470Ω	5%	0,06W	
3522©	3198 021 31010	100Ω	5%	0,06W	
3523©	3198 021 31020	1kΩ	5%	0,06W	
3524©	3198 021 34720	4,7kΩ	5%	0,06W	
3525©	3198 021 31020	1kΩ	5%	0,06W	
3526©	3198 021 34720	4,7kΩ	5%	0,06W	
3527©	3198 021 31030	10kΩ	5%	0,06W	for /22 only
3528©	3198 021 31030	10kΩ	5%	0,06W	for /22 only
3529©	3198 021 31020	1kΩ	5%	0,06W	for /22 only
3530©	3198 021 31020	1kΩ	5%	0,06W	for /22 only
3533©	3198 021 32240	220kΩ	5%	0,06W	for /22 only
3534©	3198 021 32220	2,2kΩ	5%	0,06W	for /22 only
3537©	3198 021 31030	10kΩ	5%	0,06W	
3538©	3198 021 31030	10kΩ	5%	0,06W	
3540©	3198 021 31030	10kΩ	5%	0,06W	
3541©	3198 021 31030	10kΩ	5%	0,06W	
3542©	3198 021 31030	10kΩ	5%	0,06W	
3543©	3198 021 31030	10kΩ	5%	0,06W	
3544©	3198 021 31030	10kΩ	5%	0,06W	
3545©	3198 021 31030	10kΩ	5%	0,06W	
3547©	3198 021 34720	4,7kΩ	5%	0,06W	
3549 ⚠	4822 052 10338	3,3Ω	5%	0,33W	NFR
3550 ⚠	4822 052 10338	3,3Ω	5%	0,33W	NFR
3560 ⚠	4822 052 10478	4,7Ω	5%	0,33W	NFR
3561©	3198 021 34710	470Ω	5%	0,06W	
3562©	3198 021 32720	2,7kΩ	5%	0,06W	
3563©	3198 021 32720	2,7kΩ	5%	0,06W	
3564©	3198 021 34710	470Ω	5%	0,06W	
3565©	3198 021 34710	470Ω	5%	0,06W	
3566	3198 011 06840	680kΩ	5%	0,16W	
3567	3198 011 01030	10kΩ	5%	0,16W	
3568	3198 011 02210	220Ω	5%	0,16W	
3569©	3198 021 32210	220Ω	5%	0,06W	
3570©	3198 021 34710	470Ω	5%	0,06W	

ELECTRICAL PARTSLIST ***FRONT BOARD*** *(inclusive Headphone Board, CD Key Board and Lightbar Boards)*

RESISTORS

3571 ©	3198 021 34720	4,7kΩ	5%	0,06W	
3572 ©	3198 021 34740	470kΩ	5%	0,06W	
3573 ©	3198 021 33330	33kΩ	5%	0,06W	
3574 ©	3198 021 31510	150Ω	5%	0,06W	
3575 ©	3198 021 31510	150Ω	5%	0,06W	
3577 ©	3198 021 90030	CHIP JUMPER 0603			
3578	3198 011 02710	270Ω	5%	0,16W	
3579 ©	3198 021 32710	270Ω	5%	0,06W	
3580 ©	3198 021 31210	120Ω	5%	0,06W	
3581 ©	3198 021 31210	120Ω	5%	0,06W	
3582 ©	3198 021 31030	10kΩ	5%	0,06W	
3583 ©	3198 021 31210	120Ω	5%	0,06W	
3584 ©	3198 021 34720	4,7kΩ	5%	0,06W	
3585 ©	3198 021 31210	120Ω	5%	0,06W	
3586 ©	3198 021 34710	470Ω	5%	0,06W	
3587 ©	3198 021 34710	470Ω	5%	0,06W	
3588	3198 011 03910	390Ω	5%	0,16W	
3589 ©	3198 021 33910	390Ω	5%	0,06W	
3591 ©	3198 021 31030	10kΩ	5%	0,06W	
3592 ©	3198 021 31030	10kΩ	5%	0,06W	
3593	3198 011 01820	1,8kΩ	5%	0,16W	
3594 ©	3198 021 35610	560Ω	5%	0,06W	
3596 ©	3198 021 38210	820Ω	5%	0,06W	
3598 ©	3198 021 31220	1,2kΩ	5%	0,06W	
3599 ©	3198 021 31530	15kΩ	5%	0,06W	
3600 ©	3198 021 31530	15kΩ	5%	0,06W	
3601 ©	3198 021 31530	15kΩ	5%	0,06W	
3604 ©	3198 021 31530	15kΩ	5%	0,06W	
3611 ©	3198 021 31510	150Ω	5%	0,06W	
3613 ©	3198 021 31510	150Ω	5%	0,06W	
3650 ©	3198 021 32720	2,7kΩ	5%	0,06W	
3651 ©	3198 021 32210	220Ω	5%	0,06W	
3652 ©	3198 021 32710	270Ω	5%	0,06W	
3653 ©	3198 021 33910	390Ω	5%	0,06W	
3654 ©	3198 021 35610	560Ω	5%	0,06W	
3655 ©	3198 021 38210	820Ω	5%	0,06W	
3656 ©	3198 021 31220	1,2kΩ	5%	0,06W	
3657 ©	3198 021 36840	680kΩ	5%	0,06W	
3658 ©	3198 021 31050	1MΩ	5%	0,06W	
3659 ©	3198 021 31050	1MΩ	5%	0,06W	
3660 ©	3198 021 31030	10kΩ	5%	0,06W	
3661 ©	3198 021 31510	150Ω	5%	0,06W	
3662 ©	3198 021 32720	2,7kΩ	5%	0,06W	
3663 ©	3198 021 31510	150Ω	5%	0,06W	
3698 ©	3198 021 33310	330Ω	5%	0,06W	
3699 ©	3198 021 33310	330Ω	5%	0,06W	
3700 ©	3198 021 31810	180Ω	5%	0,06W	
3701 ©	3198 021 32210	220Ω	5%	0,06W	
3710 ©	3198 021 34710	470Ω	5%	0,06W	
3711 ©	3198 021 34710	470Ω	5%	0,06W	
4401 ©	3198 021 90030	CHIP JUMPER 0603			
4402 ©	3198 021 90030	CHIP JUMPER 0603			
4403 ©	3198 021 90030	CHIP JUMPER 0603			
4404 ©	3198 021 90030	CHIP JUMPER 0603			
4405 ©	3198 021 90030	CHIP JUMPER 0603			
4406 ©	3198 021 90030	CHIP JUMPER 0603			
4407 ©	3198 021 90030	CHIP JUMPER 0603			
4408 ©	3198 021 90030	CHIP JUMPER 0603			
4409 ©	3198 021 90030	CHIP JUMPER 0603			
4410 ©	3198 021 90030	CHIP JUMPER 0603			
4411 ©	3198 021 90030	CHIP JUMPER 0603			
4412 ©	3198 021 90030	CHIP JUMPER 0603			
4413 ©	3198 021 90030	CHIP JUMPER 0603			
4414 ©	3198 021 90030	CHIP JUMPER 0603			

RESISTORS

4415 ©	3198 021 90030	CHIP JUMPER 0603
4416 ©	3198 021 90030	CHIP JUMPER 0603
4418 ©	3198 021 90030	CHIP JUMPER 0603
4419 ©	3198 021 90030	CHIP JUMPER 0603
4420 ©	3198 021 90030	CHIP JUMPER 0603
4421 ©	3198 021 90030	CHIP JUMPER 0603
4422 ©	3198 021 90030	CHIP JUMPER 0603
4423 ©	3198 021 90030	CHIP JUMPER 0603
4424 ©	3198 021 90030	CHIP JUMPER 0603
4425 ©	3198 021 90030	CHIP JUMPER 0603
4426 ©	3198 021 90030	CHIP JUMPER 0603
4427 ©	3198 021 90030	CHIP JUMPER 0603
4428 ©	3198 021 90030	CHIP JUMPER 0603
4429 ©	3198 021 90030	CHIP JUMPER 0603
4430 ©	3198 021 90030	CHIP JUMPER 0603
4431 ©	3198 021 90030	CHIP JUMPER 0603
4432 ©	3198 021 90030	CHIP JUMPER 0603
4433 ©	3198 021 90030	CHIP JUMPER 0603
4434 ©	3198 021 90030	CHIP JUMPER 0603
4435 ©	3198 021 90030	CHIP JUMPER 0603
4436 ©	3198 021 90030	CHIP JUMPER 0603
4437 ©	3198 021 90030	CHIP JUMPER 0603
4438 ©	3198 021 90030	CHIP JUMPER 0603
4439 ©	3198 021 90030	CHIP JUMPER 0603
4441 ©	3198 021 90030	CHIP JUMPER 0603
4442 ©	3198 021 90030	CHIP JUMPER 0603
4443 ©	3198 021 90030	CHIP JUMPER 0603
4444 ©	3198 021 90030	CHIP JUMPER 0603
4445 ©	3198 021 90030	CHIP JUMPER 0603
4446 ©	3198 021 90030	CHIP JUMPER 0603
4499 ©	3198 021 90030	CHIP JUMPER 0603

COILS

1401	5322 242 73686	CERAMIC RESONATOR, 12MHZ	
1402	2422 543 00381	CRYSTAL 32,768kHz	
1407	2422 543 01254	XTAL 4,332MHz	for /22 only
5400	2422 535 94686	2,7µH	
5401	2422 535 94686	2,7µH	
5402	2422 535 94686	2,7µH	
5403	2422 535 94686	2,7µH	
5404	2422 535 94686	2,7µH	
5405	2422 535 94686	2,7µH	
5406	2422 535 94686	2,7µH	
5420	2422 535 94686	2,7µH	
5421	2422 535 94686	2,7µH	

DIODES

6400	4822 130 34173	BZX79-B5V6
6401	9322 179 76676	LTL-816EELC, LED red
6406	4822 130 31878	1N4003G
6408	4822 130 30621	1N4148
6409	4822 130 30621	1N4148
6411 ©	9340 260 20115	BAW56W
6412 ©	9340 260 20115	BAW56W
6413 ©	9340 260 20115	BAW56W
6414 ©	9340 260 20115	BAW56W
6415 ©	9340 260 20115	BAW56W
6420 ©	3198 020 55680	BZX384-C5V6
6450	4822 130 30621	1N4148
6451 ©	9322 147 85685	LST770-KL, LED RED
6452 ©	9322 147 85685	LST770-KL, LED RED
6453 ©	9322 147 85685	LST770-KL, LED RED
6454 ©	9322 147 85685	LST770-KL, RED

DIODES

6460 ©	9322 204 64685	LBT676-K2M1-1, LED BLUE
6461 ©	9322 204 64685	LBT676-K2M1-1, LED BLUE
6462 ©	9322 204 64685	LBT676-K2M1-1, LED BLUE
6463 ©	9322 179 56685	LBT776-K2M1-1, LED BLUE

TRANSISTORS

7400 ©	5322 130 60159	BC846B
7401 ©	5322 130 60159	BC846B
7404 ©	3198 010 42310	BC847BW
7408 ©	3198 010 42310	BC847BW
7410	4822 130 40855	BC337-40
7450 ©	9340 217 80115	BC847CW
7452 ©	9340 217 80115	BC847CW

INTEGRATED CIRCUITS

7403 ©	9965 000 25714	TMP88PU77ZF, µP (OTP)
7405	9322 185 95667	IR-RECEIVER, TSOP4836
7406	4822 209 17226	M24C08-WMN6, EEPROM
7407 ©	9352 686 05118	SAA6581T, RDS DECODER IC for /22 only
7451 ©	4822 209 15449	74HC4094D, SHIFT REGISTER

Note:
Components printed in grey colour are considered as standard spareparts and thus not available on service stock.
Code numbers are published for orientation only.

MISCELLANEOUS

1101	2422 015 19376	SOCKET CLICKFIT 2P	USA only
1102	4822 267 10283	SOCKET COAX, IEC 75Ω	not USA
1103	4822 265 31184	JST CONNECTOR, 2 POLE	
1110	2422 542 90071	FM FRONTEND	
1120	4822 265 11515	FFC SOCKET, 8P	

CAPACITORS

2102 ©	4822 126 13838	100nF	10%	50V	not USA
2105 ©	4822 126 13838	100nF	10%	50V	USA only
2106	2020 800 00204	TRIMCAP. 4,2 - 20pF, N750			LW only
2106	2020 800 00191	TRIMCAP. 3 - 11pF, N450			FM/AM only
2107	4822 121 51319	1µF	20%	50V	
2108 ©	5322 122 32531	100pF	5%	50V	LW only
2109 ©	5322 122 32448	10pF	5%	50V	LW only
2120 ©	4822 126 13689	18pF	1%	63V	FM/AM only
2120 ©	5322 122 32658	22pF	5%	50V	LW only
2122 ©	4822 122 33891	3,3nF	10%	63V	LW only
2123 ©	2020 552 93494	390pF	1%	50V	LW only
2124 ©	4822 122 33177	10nF	20%	50V	FM/AM only
2125 ©	2020 552 96199	560pF	1%	50V	
2127 ©	4822 126 14076	220nF	20%	25V	
2128	4822 124 40248	10µF	20%	63V	
2129	4822 124 41584	100µF	20%	10V	
2130 ©	5322 122 32654	22nF	10%	63V	
2131 ©	4822 126 13482	470nF	20%	16V	
2132 ©	4822 126 13482	470nF	20%	16V	
2133	4822 124 21913	1µF	20%	63V	
2134 ©	3198 017 31530	15nF	10%	50V	not USA
2134 ©	5322 122 32654	22nF	10%	63V	USA only
2135 ©	3198 017 31530	15nF	10%	50V	not USA
2135 ©	3198 017 32230	22nF	10%	25V	USA only
2136 ©	4822 126 14076	220nF	20%	25V	
2137 ©	4822 126 14076	220nF	20%	25V	
2138	4822 124 22652	2,2µF	20%	50V	
2139 ©	4822 126 14236	15pF	5%	50V	
2140 ©	4822 126 13695	82pF	1%	63V	
2141 ©	4822 126 13838	100nF	10%	50V	
2143 ©	4822 126 14076	220nF	20%	25V	
2144	4822 124 21913	1µF	20%	63V	
2145 ©	4822 122 33575	220pF	5%	50V	
2146 ©	4822 122 33575	220pF	5%	50V	
2147 ©	4822 122 33575	220pF	5%	50V	
2148 ©	4822 122 33127	2,2nF	10%	63V	
2149 ©	5322 122 32659	33pF	5%	50V	RDS only
2150 ©	4822 126 13838	100nF	10%	50V	
2159 ©	5322 122 31151	22µF	20%	50V	
2163 ©	4822 126 13838	100nF	10%	50V	LW only
2164 ©	4822 126 13482	470nF	20%	16V	
2165 ©	4822 126 13838	100nF	10%	50V	
2166 ©	5322 122 31647	1nF	10%	63V	
2167 ©	4822 122 33926	12pF	5%	50V	
2169 ©	4822 122 33127	2,2nF	10%	63V	RDS only
2180 ©	3198 017 31030	10nF	10%	50V	
2190 ©	4822 126 13838	100nF	10%	50V	
2191	4822 124 40178	100µF	20%	10V	

RESISTORS

3105 ©	4822 117 11503	220Ω	5%	0,1W	
3108 ©	4822 117 11449	2,2kΩ	1%	0,1W	LW only
3109 ©	4822 051 20472	4,7kΩ	5%	0,1W	LW only
3123 ©	4822 051 20472	4,7kΩ	5%	0,1W	LW only
3125 ©	4822 117 10833	10kΩ	1%	0,1W	LW only
3128 ©	4822 117 11449	2,2kΩ	1%	0,1W	LW only
3130 ©	3198 021 38210	820Ω	5%	0,06W	
3131 ©	3198 021 38210	820Ω	5%	0,06W	
3132 ©	4822 051 20479	47Ω	5%	0,1W	
3134 ©	4822 051 20223	22kΩ	5%	0,1W	
3135 ©	3198 021 31020	1kΩ	5%	0,06W	
3137 ©	4822 051 20223	22kΩ	5%	0,1W	LW only
3141 ©	4822 117 11148	56kΩ	1%	0,1W	
3142	4822 100 12159	TRIMPOT. 100kΩ			
3143 ©	4822 051 20223	22kΩ	5%	0,1W	RDS only

ELECTRICAL PARTSLIST *TUNER BOARD ECO6 CENELEC*

RESISTORS

3144 ©	4822 051 10102	1kΩ	2%	0,25W	RDS only
3145 ©	4822 117 11449	2,2kΩ	1%	0,1W	
3146 ©	4822 051 20229	22Ω	5%	0,1W	
3150 ©	4822 117 10833	10kΩ	1%	0,1W	
3151 ©	4822 051 20683	68kΩ	5%	0,1W	
3152 ©	4822 051 20471	470Ω	5%	0,1W	
3153 ©	4822 051 20471	470Ω	5%	0,1W	
3154 ©	4822 117 13577	330Ω	1%	0,1W	
3155 ©	4822 117 10353	150Ω	5%	0,1W	
3156 ©	4822 117 10837	100kΩ	1%	0,1W	
3157 ©	4822 117 10837	100kΩ	1%	0,1W	
3158 ©	4822 051 20471	470Ω	5%	0,1W	
3159 ©	4822 051 20471	470Ω	5%	0,1W	
3160 ©	4822 051 20471	470Ω	5%	0,1W	
3161 ©	4822 051 20223	22kΩ	5%	0,1W	
3167 ©	4822 051 20121	120Ω	5%	0,1W	
3168 ©	4822 051 20121	120Ω	5%	0,1W	
3169 ©	4822 051 20154	150kΩ	5%	0,1W	
3170 ©	4822 117 10837	100kΩ	1%	0,1W	
3171 ©	4822 117 10834	47kΩ	1%	0,1W	
3172 ©	4822 051 20562	5,6kΩ	5%	0,1W	
3176 ©	4822 051 20333	33kΩ	5%	0,1W	RDS only
3180 ©	4822 117 10833	10kΩ	1%	0,1W	LW only
3190 ©	4822 051 20121	120Ω	5%	0,1W	
3191 ©	4822 051 20121	120Ω	5%	0,1W	
3192 ©	4822 117 13577	330Ω	1%	0,1W	
3193 ©	4822 117 13577	330Ω	1%	0,1W	
3194 ©	4822 117 11449	2,2kΩ	1%	0,1W	
3195 ©	4822 051 20101	100Ω	5%	0,1W	
4101 ©	4822 051 20008	CHIP JUMPER 0805			FM/AM only
4102 ©	4822 051 20008	CHIP JUMPER 0805			FM/AM only
4104 ©	4822 051 20008	CHIP JUMPER 0805			FM/AM only
4105 ©	4822 051 20008	CHIP JUMPER 0805			
4106 ©	4822 051 20008	CHIP JUMPER 0805			
4107 ©	4822 051 20008	CHIP JUMPER 0805			

COILS

5102	4822 157 71634	RF-COIL MW	
5103	2422 549 44107	RF-COIL LW	LW only
5109	4822 157 71639	FM-IF FILTER 10,7MHz	
5110	4822 242 70665	FM-IF FILTER 10,7MHz	
5111	2422 549 44023	AM-IF FILTER 450kHz	
5112	4822 157 70302	AM-IF FILTER 450kHz	
5114	4822 157 70302	AM-IF FILTER 450kHz	
5115	4822 157 71636	ANTI BIRDY FILTER	
5118 ©	2422 535 95881	100nH	
5119	4822 157 11443	DISCRIMINATOR COIL	
5121	4822 242 10261	QUARTZ 75kHz	
5122	2422 549 44108	RF-COIL, LW-OSCILLATOR	LW only
5123	2422 549 44108	RF-COIL, MW-OSCILLATOR	

DIODES

6105 ©	4822 130 83075	HN1V02H
6106 ©	4822 130 83757	BAS216
6107 ©	9340 386 90115	BZX284-C11
6120 ©	4822 130 83757	BAS216

TRANSISTORS

7103 ©	5322 130 42756	BC857C	RDS only
7104	9322 003 64676	TBC337-40	LW only
7105	9322 003 64676	TBC337-40	LW only
7109 ©	4822 130 60373	BC856B	LW only
7110 ©	4822 130 60373	BC856B	
7111 ©	5322 130 42755	BC847C	
7112	4822 130 44503	BC547C	
7122 ©	5322 130 42755	BC847C	LW only
7124 ©	5322 130 42755	BC847C	LW only

INTEGRATED CIRCUITS

7101	4822 209 90315	TEA5762H/V1, RADIO IC

Note:
Components printed in grey colour are considered as standard spareparts and thus not available on service stock.
Code numbers are published for orientation only.

ELECTRICAL PARTSLIST *TUNER BOARD ECO6 non-CENELEC*

MISCELLANEOUS

1101	2422 015 19376	SOCKET 2P CLICKFIT	USA only
1102	4822 267 10283	SOCKET COAX, IEC 75Ω	not USA
1103	4822 265 31184	JST CONNECTOR 2 POLE	
1120	4822 265 11515	FFC SOCKET, 8P	

CAPACITORS

2101 ©	4822 126 13692	47pF	1%	63V	
2102 ©	4822 126 13838	100nF	10%	50V	not USA
2103 ©	5322 122 31647	1nF	10%	63V	
2104 ©	5322 122 32531	100pF	5%	50V	
2105 ©	4822 126 13838	100nF	10%	50V	USA only
2106	2020 800 00191	3-11pF TRIMCAP.,N450			
2107	4822 121 51319	1µF	20%	50V	
2120 ©	4822 126 13689	18pF	1%	63V	
2124 ©	5322 122 32654	22nF	10%	63V	
2125 ©	2020 552 96199	560pF	1%	50V	
2126 ©	5322 122 31863	330pF	5%	50V	
2127 ©	4822 126 14076	220nF	20%	25V	
2128	4822 124 40248	10µF	20%	63V	
2129	4822 124 41584	100µF	20%	10V	
2130 ©	5322 122 32654	22nF	10%	63V	
2131 ©	4822 126 13482	470nF	20%	16V	
2132 ©	4822 126 13482	470nF	20%	16V	
2133	4822 124 21913	1µF	20%	63V	
2134 ©	4822 126 13188	15nF	5%	63V	not USA
2134 ©	5322 122 32654	22nF	10%	63V	USA only
2135 ©	4822 126 13188	15nF	5%	63V	not USA
2135 ©	5322 122 32654	22nF	10%	63V	USA only
2136 ©	4822 126 14076	220nF	20%	25V	
2137 ©	4822 126 14076	220nF	20%	25V	
2138	4822 124 22652	2,2µF	20%	50V	
2139 ©	4822 126 14236	15pF	5%	50V	
2140 ©	4822 126 13695	82pF	1%	63V	
2141 ©	4822 126 13838	100nF	10%	50V	
2143 ©	4822 126 14076	220nF	20%	25V	
2144	4822 124 21913	1µF	20%	63V	
2145 ©	4822 122 33575	220pF	5%	50V	
2146 ©	4822 122 33575	220pF	5%	50V	
2147 ©	4822 122 33575	220pF	5%	50V	
2148 ©	4822 122 33127	2,2nF	10%	63V	
2149 ©	5322 122 32659	33pF	5%	50V	RDS only
2150 ©	4822 126 13838	100nF	10%	50V	
2152 ©	4822 126 12105	33nF	5%	63V	not for East Europe
2152 ©	5322 116 80853	560pF	5%	63V	for East Europe only
2153 ©	4822 126 13486	15pF	2%	63V	not for East Europe
2153 ©	4822 122 33926	12pF	2%	50V	for East Europe only
2155	2020 800 00191	3-11pF TRIMCAP.,N450			
2159 ©	5322 122 32659	33pF	5%	50V	
2164 ©	4822 126 13482	470nF	20%	16V	
2165 ©	4822 126 13838	100nF	10%	50V	
2166 ©	5322 122 31647	1nF	10%	63V	
2167 ©	4822 122 33926	12pF	5%	50V	
2169 ©	4822 122 33127	2,2nF	10%	63V	RDS only

RESISTORS

3101 ©	4822 051 20333	33kΩ	5%	0,1W	
3102 ©	4822 117 10837	100kΩ	1%	0,1W	
3103 ©	4822 051 20822	8,2kΩ	5%	0,1W	
3104 ©	4822 117 13577	330Ω	1%	0,1W	
3105 ©	4822 117 11503	220Ω	5%	0,1W	
3132 ©	4822 051 20479	47Ω	5%	0,1W	
3134 ©	4822 051 20223	22kΩ	5%	0,1W	
3141 ©	4822 117 11148	56kΩ	1%	0,1W	
3142	4822 100 12159	TRIMPOT. 100kΩ			

RESISTORS

3143 ©	4822 051 20223	22kΩ	5%	0,1W	RDS only
3144 ©	4822 051 10102	1kΩ	2%	0,25W	RDS only
3145©	4822 117 11449	2,2kΩ	1%	0,1W	
3146 ©	4822 051 20229	22Ω	5%	0,1W	
3152 ©	4822 051 20471	470Ω	5%	0,1W	
3153 ©	4822 051 20471	470Ω	5%	0,1W	
3154 ©	4822 117 13577	330Ω	1%	0,1W	
3155 ©	4822 117 11503	220Ω	5%	0,1W	
3156 ©	4822 117 10837	100kΩ	1%	0,1W	
3157 ©	4822 117 10837	100kΩ	1%	0,1W	
3158 ©	4822 051 20471	470Ω	5%	0,1W	
3159 ©	4822 051 20471	470Ω	5%	0,1W	
3160 ©	4822 051 20471	470Ω	5%	0,1W	
3161 ©	4822 051 20223	22kΩ	5%	0,1W	
3167 ©	4822 051 20121	120Ω	5%	0,1W	
3168 ©	4822 051 20121	120Ω	5%	0,1W	
3169 ©	4822 051 20154	150kΩ	5%	0,1W	
3170 ©	4822 117 10837	100kΩ	1%	0,1W	
3172 ©	4822 051 20562	5,6kΩ	5%	0,1W	
3176 ©	4822 051 20333	33kΩ	5%	0,1W	RDS only
3181 ©	4822 051 10102	1kΩ	2%	0,25W	
4103 ©	4822 051 20008	CHIP JUMPER 0805			
4106 ©	4822 051 20008	CHIP JUMPER 0805			
4107 ©	4822 051 20008	CHIP JUMPER 0805			
4108 ©	4822 051 20008	CHIP JUMPER 0805			

COILS

5102	4822 157 71634	RF-COIL MW
5109	4822 242 70665	FM-IF FILTER 10,7MHz
5110	4822 242 70665	FM-IF FILTER 10,7MHz
5111	2422 549 44023	AM-IF FILTER 450kHz
5112	4822 157 70302	AM-IF FILTER 450kHz
5114	4822 157 70302	AM-IF FILTER 450kHz
5119	4822 157 11443	DISCRIMINATOR COIL
5121	4822 242 10261	QUARTZ 75kHz
5123	2422 549 44108	RF-COIL, AM-OSCILLATOR
5130	4822 157 11843	RF COIL 1,5 TURNS
5131	4822 157 11843	RF COIL 1,5 TURNS

DIODES

6103 ©	5322 130 34337	BAV99
6105 ©	4822 130 83075	HN1V02H
6106 ©	4822 130 83757	BAS216
6107 ©	9340 386 90115	BZX284-C11
6120 ©	4822 130 83757	BAS216
6130 ©	4822 130 82833	1SV228
6131 ©	4822 130 82833	1SV228

TRANSISTORS

7102	4822 130 42131	BF550	
7103 ©	5322 130 42756	BC857C	RDS only
7111 ©	5322 130 42755	BC847C	
7112	4822 130 44503	BC547C	

INTEGRATED CIRCUITS

7101 ©	9351 740 80557	TEA5757H/V1, RADIO IC

Note:
Components printed in grey colour are considered as standard spareparts and thus not available on service stock.
Code numbers are published for orientation only.